# INEEL HLW Disposition Map

**Dataset: IPAB-IS (6/26/00)**

**PREDECISIONAL DRAFT**

This map is conceptual and in many cases does not represent cleanup or transfer decisions; this map does not preclude the on-going regulatory and stakeholder decision-making processes.

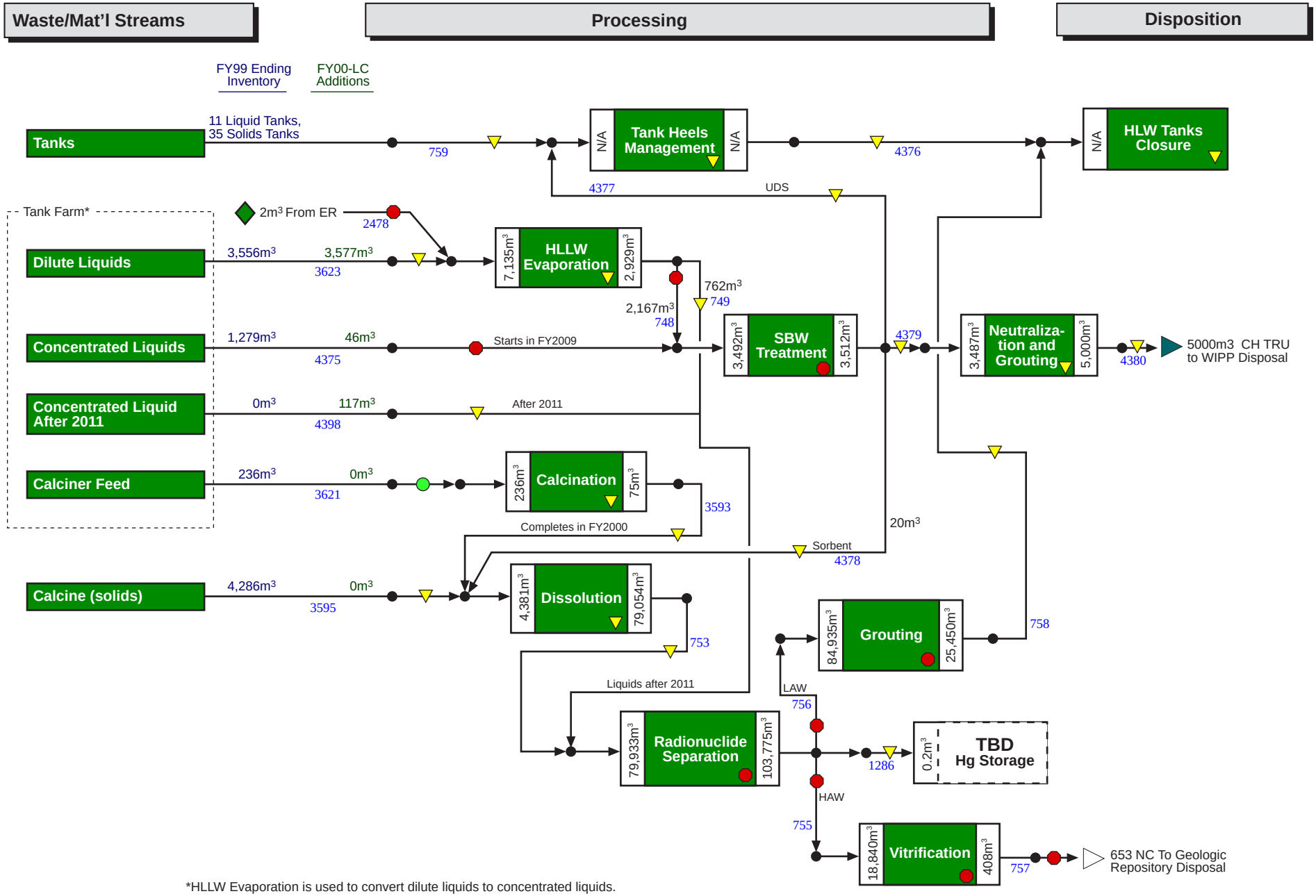


*HLLW Evaporation is used to convert dilute liquids to concentrated liquids.

KEY: Albuquerque | Carlsbad | Chicago | Commercial | Idaho | Nevada | Oak Ridge | Oakland | Ohio | Richland | Rocky Flats | SRS | Other | Unknown | Off-site Interface: ▷ | On site Interface: ◇

Rev. 5.0
7/5/00

# INEEL HLW Disposition Map

**Dataset: IPAB-IS (6/26/00)**

**PREDECISIONAL DRAFT**
This map is conceptual and in many cases does not represent cleanup or transfer decisions; this map does not preclude the on-going regulatory and stakeholder decision-making processes.

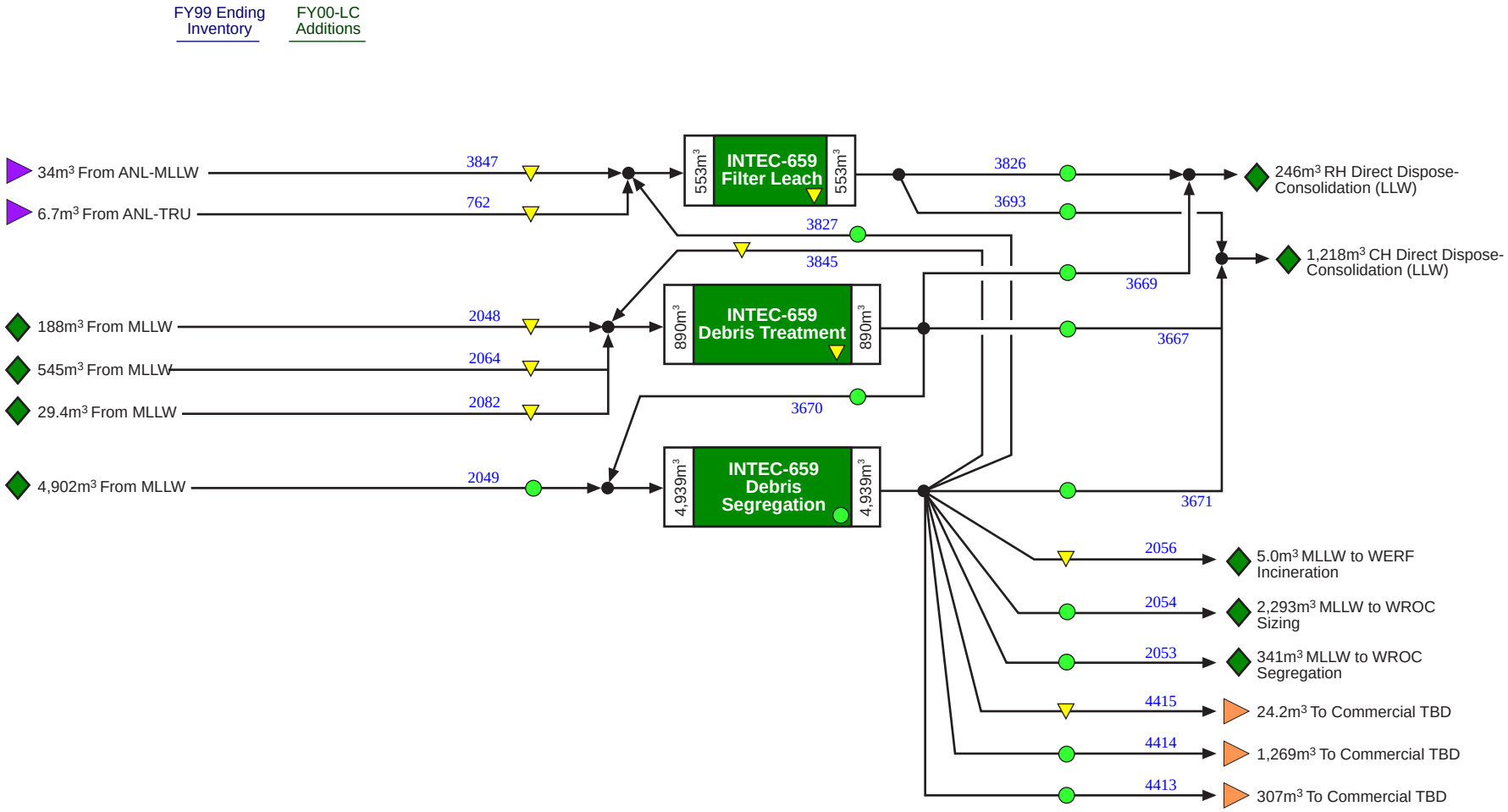


KEY: Albuquerque | Carlsbad | Chicago | Commercial | Idaho | Nevada | Oak Ridge | Oakland | Ohio | Richland | Rocky Flats | SRS | Other | Unknown | Off-site Interface: ▷ | On site Interface: ◇

Rev. 5.0
7/5/00

# West Valley HLW Disposition Map

**Dataset: IPAB-IS (6/26/00)**

**PREDECISIONAL DRAFT**

This map is conceptual and in many cases does not represent cleanup or transfer decisions; this map does not preclude the on-going regulatory and stakeholder decision-making processes.

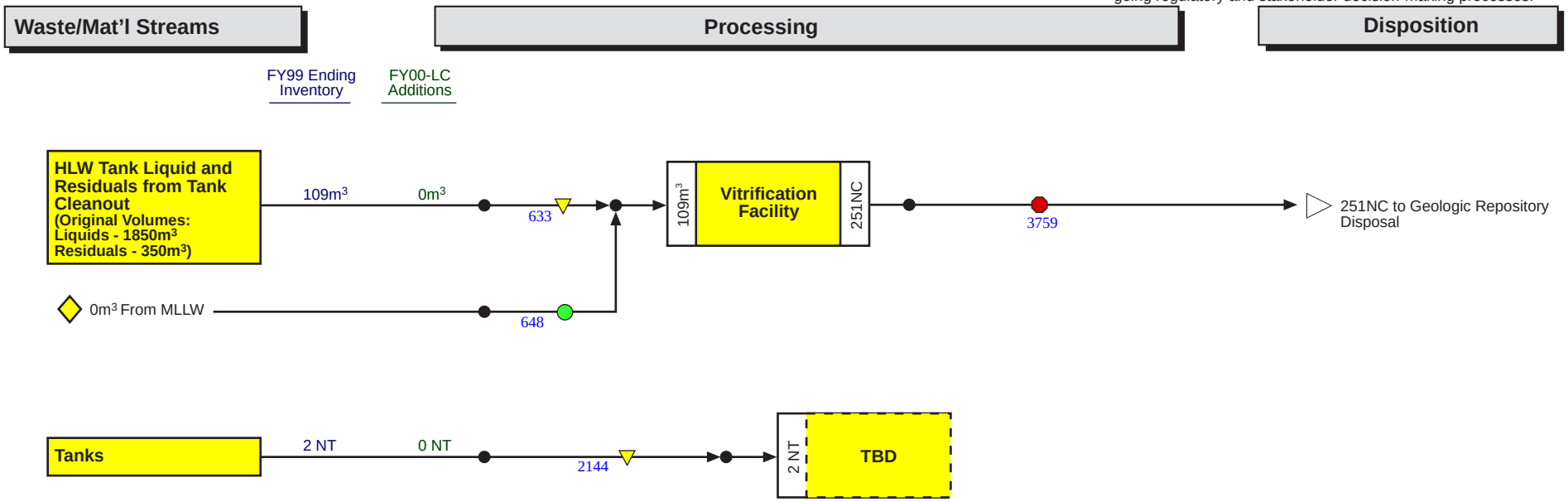


KEY: Albuquerque | Carlsbad | Chicago | Commercial | Idaho | Nevada | Oak Ridge | Oakland | Ohio | Richland | Rocky Flats | SRS | Other | Unknown | Off-site Interface: ▷ | On site Interface: ◇

Rev. 5.0
7/6/00

# Office of River Protection HLW Disposition Map

**Dataset: IPAB-IS (6/26/00)**

**PREDECISIONAL DRAFT**

This map is conceptual and in many cases does not represent cleanup or transfer decisions; this map does not preclude the on-going regulatory and stakeholder decision-making processes.

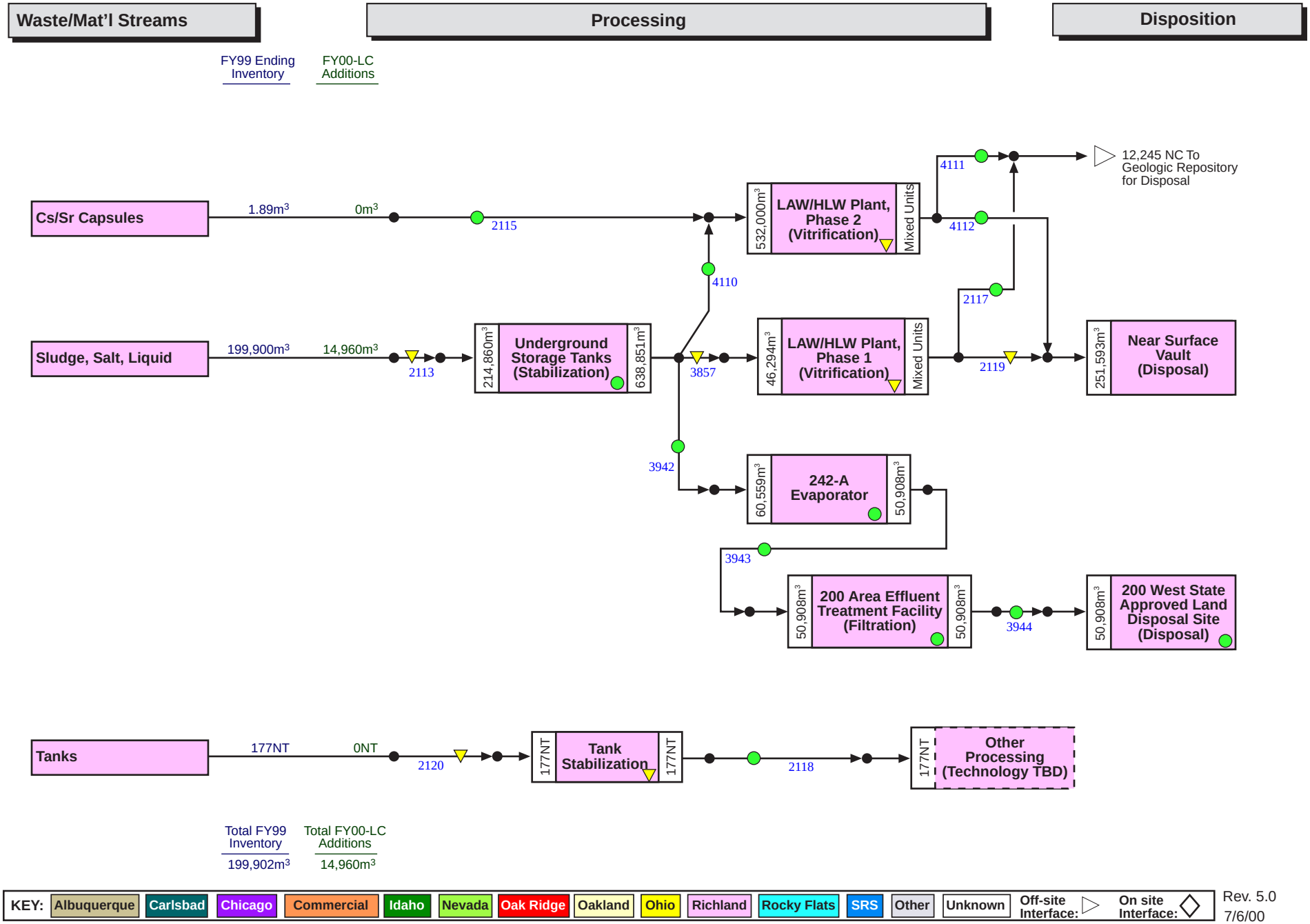


KEY: Albuquerque | Carlsbad | Chicago | Commercial | Idaho | Nevada | Oak Ridge | Oakland | Ohio | Richland | Rocky Flats | SRS | Other | Unknown | Off-site Interface: ▷ | On site Interface: ◇

Rev. 5.0
7/6/00

# SRS HLW Disposition Map

**Dataset: IPAB-IS (6/26/00)**

**PREDECISIONAL DRAFT**

This map is conceptual and in many cases does not represent cleanup or transfer decisions; this map does not preclude the on-going regulatory and stakeholder decision-making processes.

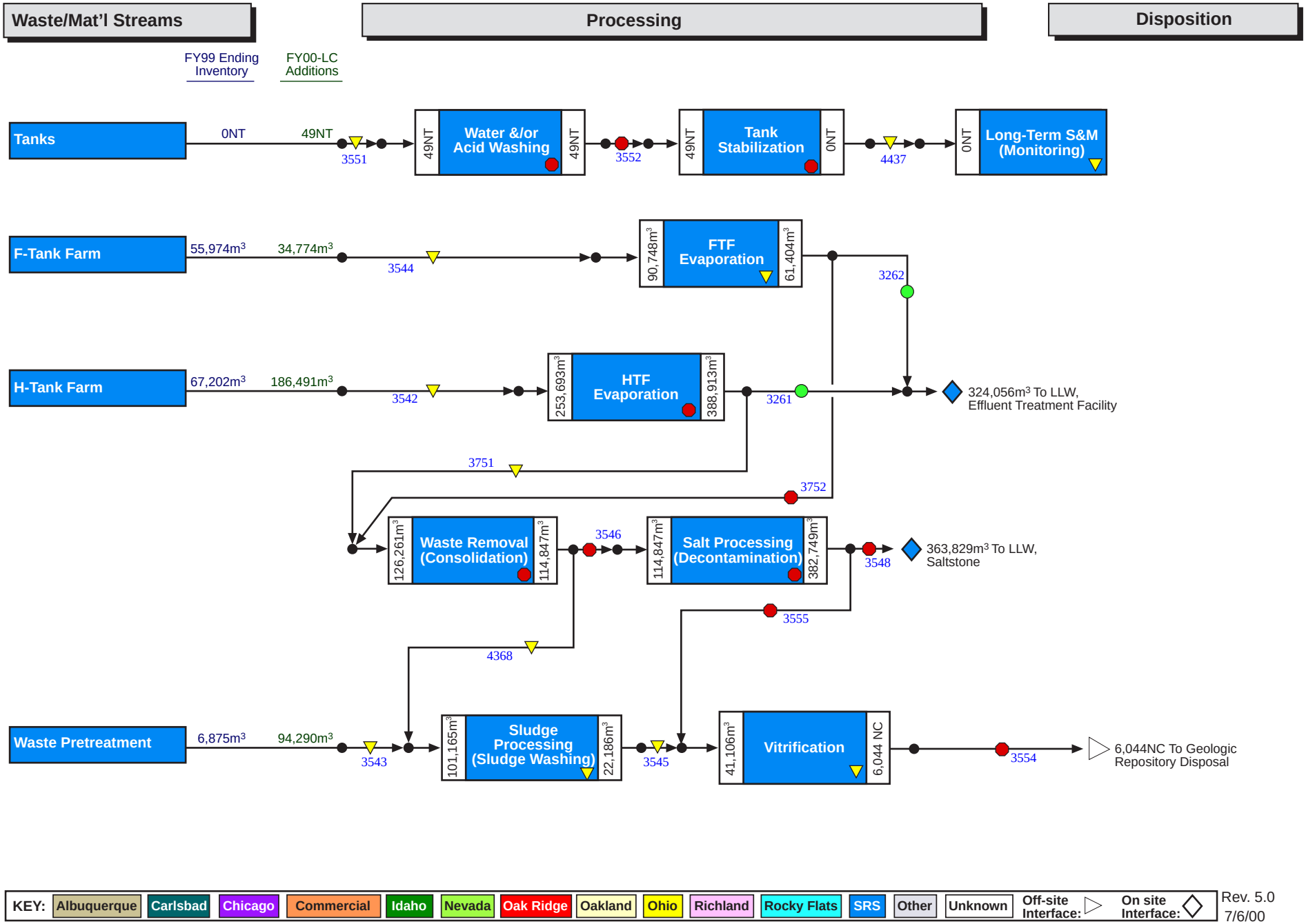


KEY: Albuquerque | Carlsbad | Chicago | Commercial | Idaho | Nevada | Oak Ridge | Oakland | Ohio | Richland | Rocky Flats | SRS | Other | Unknown | Off-site Interface: ▷ | On site Interface: ◇

Rev. 5.0
7/6/00