Fort St. Vrain SNF Disposition Map

Dataset: IPAB-IS (6/26/00)

PREDECISIONAL DRAFT
This map is conceptual and in many cases does not represent cleanup or transfer decisions; this map does not preclude the on-going regulatory and stakeholder decision-making processes.

Waste/Mat'l Streams	Processing	Disposition

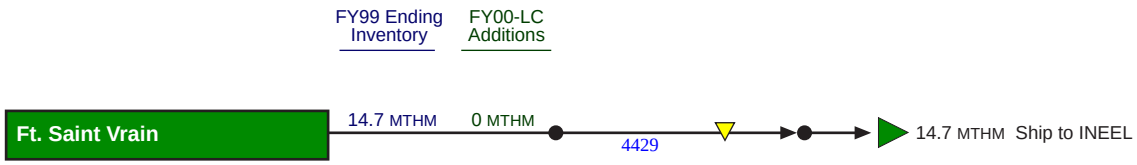

KEY: Albuquerque | Carlsbad | Chicago | Commercial | Idaho | Nevada | Oak Ridge | Oakland | Ohio | Richland | Rocky Flats | SRS | Other | Unknown | Off-site Interface: ▷ | On site Interface: ◇

Rev. 5.0
7/5/00

INEEL ER Disposition Map

Dataset: IPAB-IS (6/26/00)

PREDECISIONAL DRAFT

This map is conceptual and in many cases does not represent cleanup or transfer decisions; this map does not preclude the on-going regulatory and stakeholder decision-making processes.

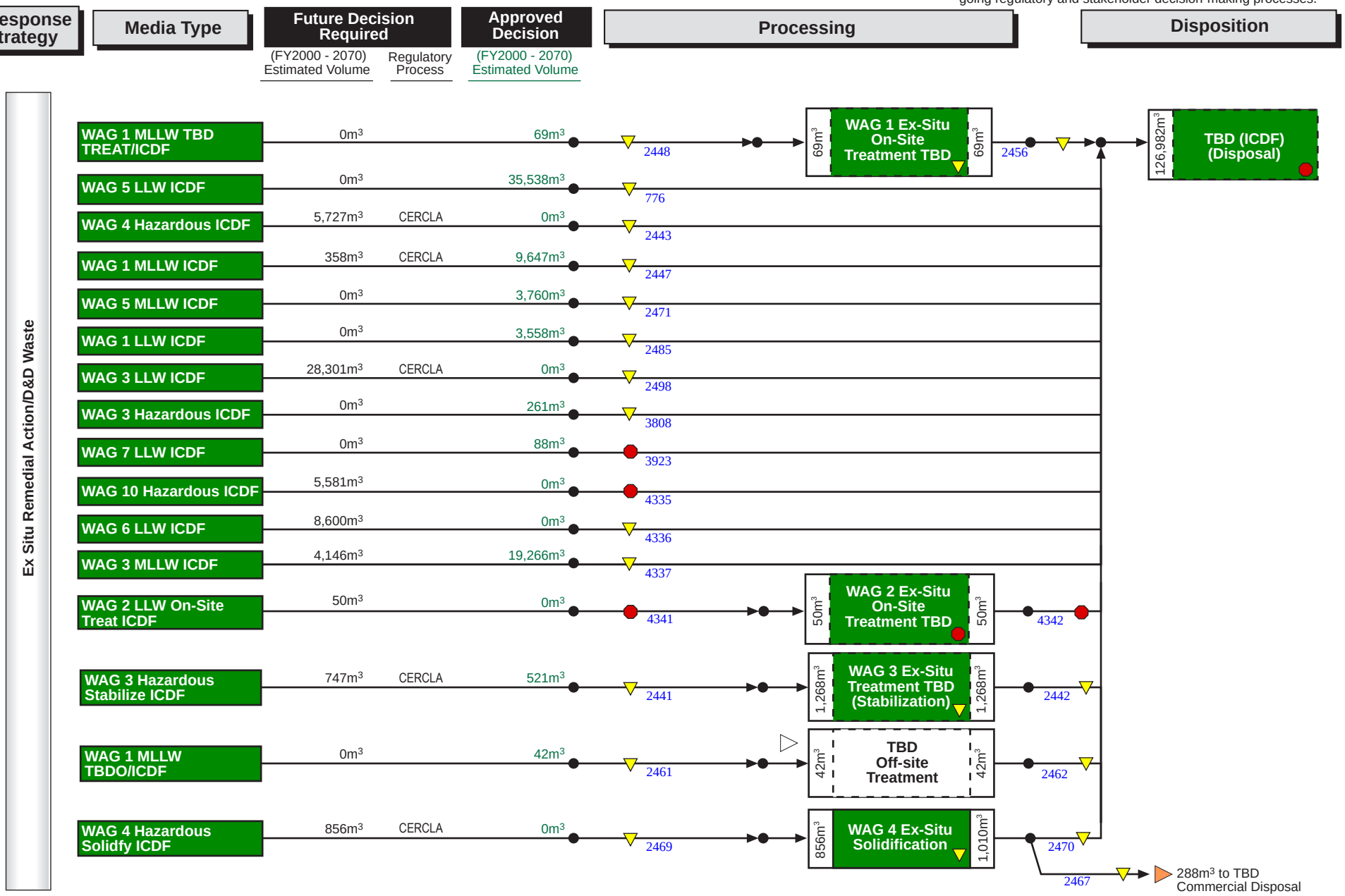

KEY: Albuquerque | Carlsbad | Chicago | Commercial | Idaho | Nevada | Oak Ridge | Oakland | Ohio | Richland | Rocky Flats | SRS | Other | Unknown | Off-site Interface: ▷ | On site Interface: ◇

Rev. 5.0
7/5/00

INEEL ER Disposition Map

Dataset: IPAB-IS (6/26/00)

PREDECISIONAL DRAFT

This map is conceptual and in many cases does not represent cleanup or transfer decisions; this map does not preclude the on-going regulatory and stakeholder decision-making processes.

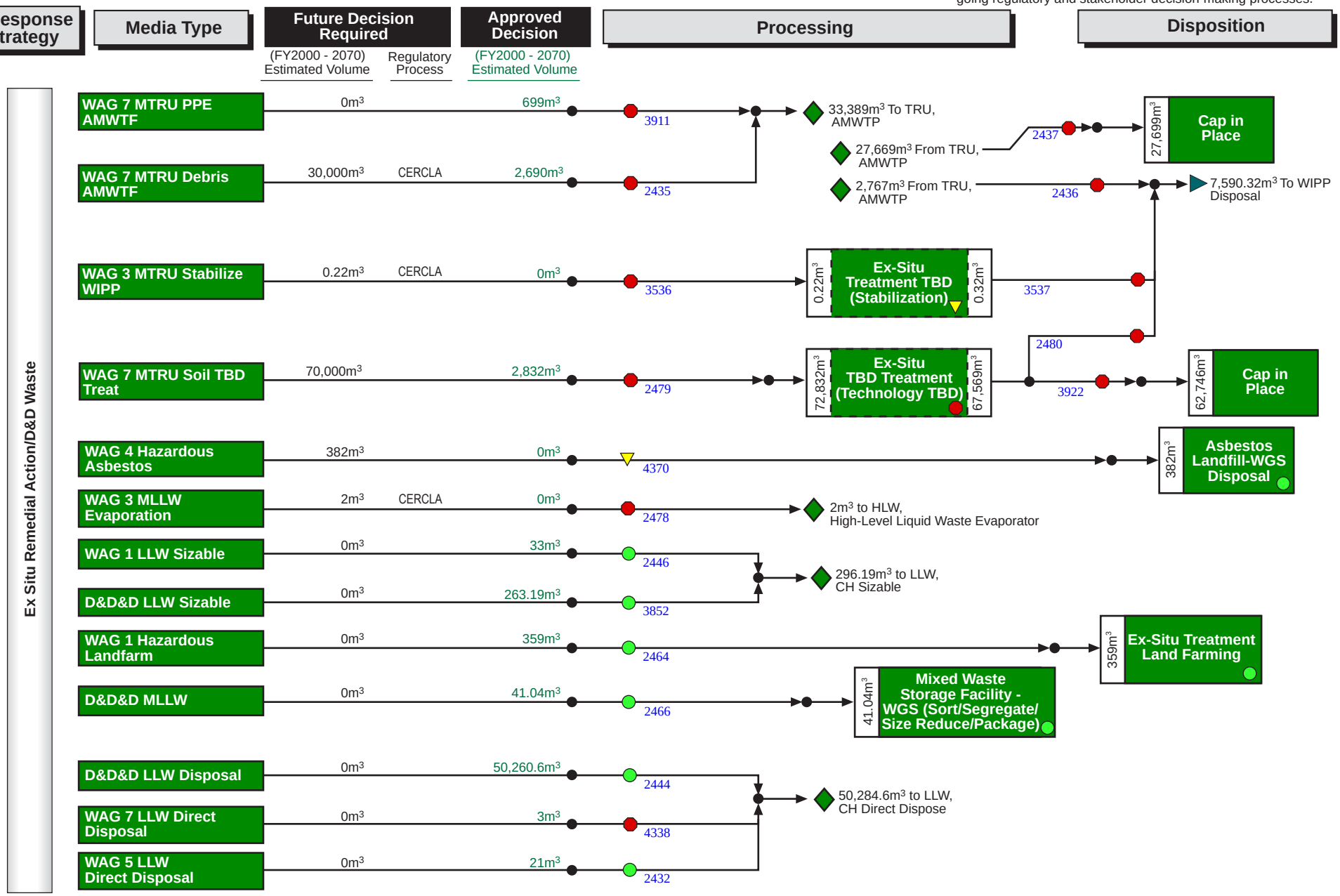

KEY: Albuquerque | Carlsbad | Chicago | Commercial | Idaho | Nevada | Oak Ridge | Oakland | Ohio | Richland | Rocky Flats | SRS | Other | Unknown | Off-site Interface: ▷ | On site Interface: ◇

Rev. 5.0
7/5/00

INEEL ER Disposition Map

Dataset: IPAB-IS (6/26/00)

PREDECISIONAL DRAFT

This map is conceptual and in many cases does not represent cleanup or transfer decisions; this map does not preclude the on-going regulatory and stakeholder decision-making processes.

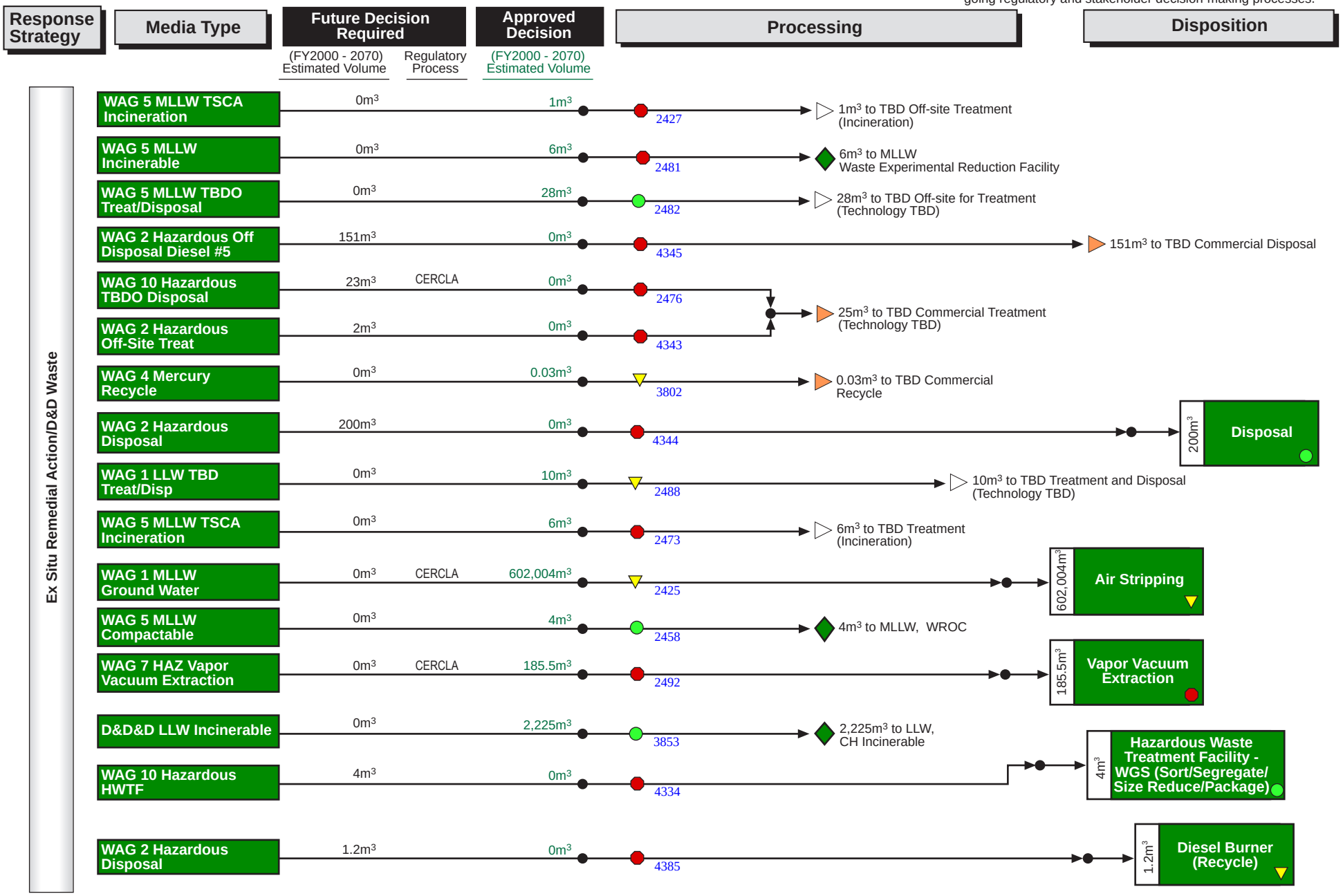

KEY: Albuquerque | Carlsbad | Chicago | Commercial | Idaho | Nevada | Oak Ridge | Oakland | Ohio | Richland | Rocky Flats | SRS | Other | Unknown | Off-site Interface: ▷ | On site Interface: ◇

Rev. 5.0
7/5/00

INEEL ER Disposition Map

Dataset: IPAB-IS (6/26/00)

PREDECISIONAL DRAFT
This map is conceptual and in many cases does not represent cleanup or transfer decisions; this map does not preclude the on-going regulatory and stakeholder decision-making processes.

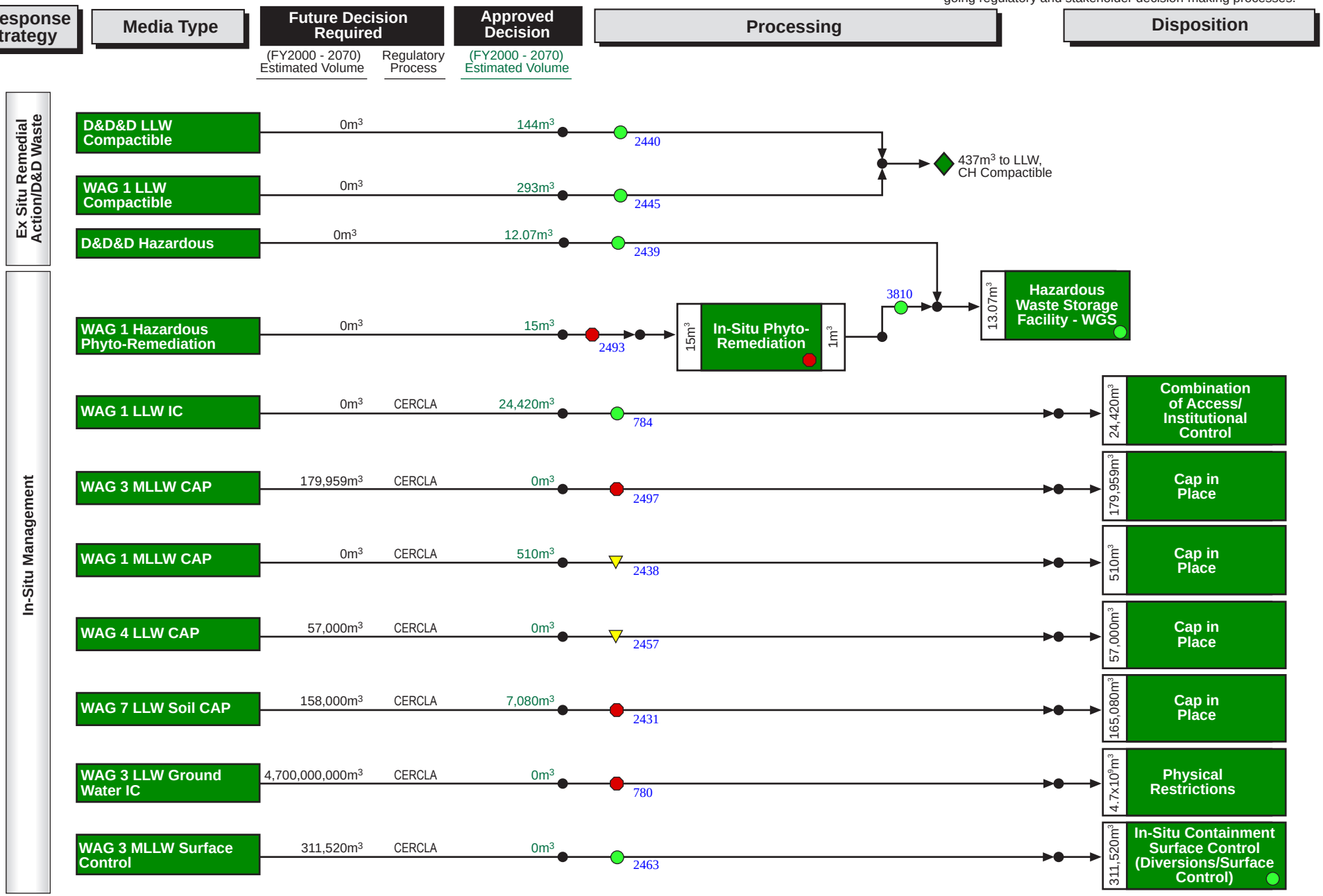

KEY: Albuquerque | Carlsbad | Chicago | Commercial | Idaho | Nevada | Oak Ridge | Oakland | Ohio | Richland | Rocky Flats | SRS | Other | Unknown | Off-site Interface: ▷ | On site Interface: ◇

Rev. 5.0
7/5/00

INEEL ER Disposition Map

Dataset: IPAB-IS (6/26/00)

PREDECISIONAL DRAFT
This map is conceptual and in many cases does not represent cleanup or transfer decisions; this map does not preclude the on-going regulatory and stakeholder decision-making processes.

Response Strategy	Media Type	Future Decision Required (FY2000 - 2070) Estimated Volume	Future Decision Required: Regulatory Process	Approved Decision (FY2000 - 2070) Estimated Volume	Processing	Disposition	
In-Situ Management	WAG 2 LLW IC	0m³		35,391m³	2490	35,391m³	Combination of Access/ Institutional Controls
	WAG 6 LLW IC	17m³	CERCLA	0m³	2491	17m³	Access/Institutional Controls - TBD
	WAG 10 Hazardous Bio-Remediation	12,480m³	CERCLA	0m³	2495	12,480m³	Ex-Situ Treatment Bio-Remediation
	WAG 3 LLW CAP	1,283m³	CERCLA	84,459m³	2496	85,742m³	Cap in Place
	WAG 5 LLW CAP	0m³		27m³	4369	27m³	Cap in Place
	WAG 2 Hazardous Institutional Control	0m³		403m³	4383	403m³	Combination of Access/Institutional Controls
	WAG 6 LLW CAP	234m³	CERCLA	0m³	2430	234m³	Cap in Place
	WAG 7 MTRU CAP	3,679m³		0m³	4444	3,679m³	Cap in Place
	WAG 7 LLW Debris Cap	30,000m³		1,558m³	772	31,558m³	Cap in Place

	Future Decision	Approved
Groundwater/Surfacewater:	4,700,000,000m³	602,004m³
In-Situ Response Strategy:	996,703m³	153,863m³
Ex Situ Response Strategy:	155,131m³	132,866m³

Information collected and consolidated by ER Support Staff

KEY: Albuquerque | Carlsbad | Chicago | Commercial | Idaho | Nevada | Oak Ridge | Oakland | Ohio | Richland | Rocky Flats | SRS | Other | Unknown | Off-site Interface: ▷ | On site Interface: ◇

Rev. 5.0
7/5/00

INEEL HLW Disposition Map

Dataset: IPAB-IS (6/26/00)

PREDECISIONAL DRAFT

This map is conceptual and in many cases does not represent cleanup or transfer decisions; this map does not preclude the on-going regulatory and stakeholder decision-making processes.

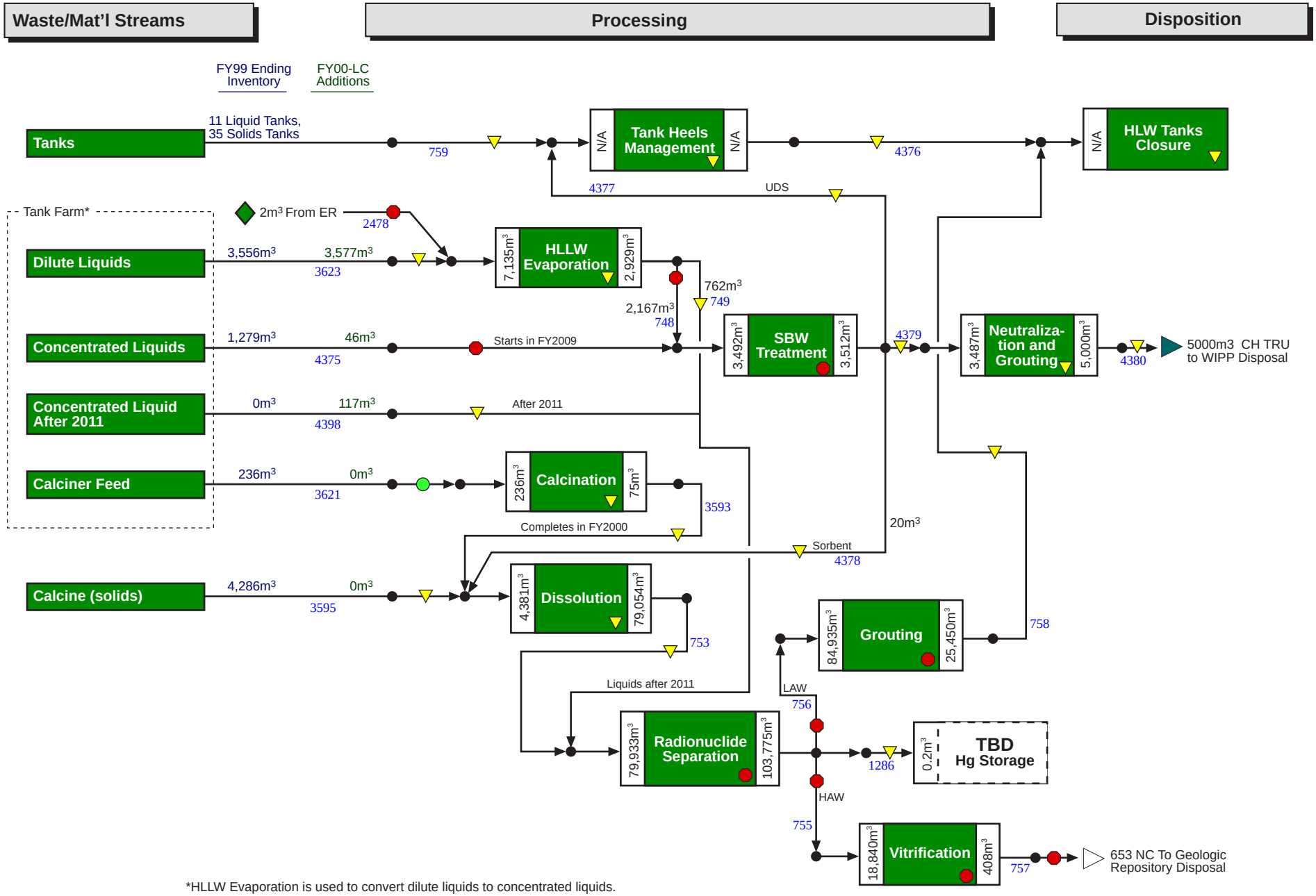

*HLLW Evaporation is used to convert dilute liquids to concentrated liquids.

KEY: Albuquerque | Carlsbad | Chicago | Commercial | Idaho | Nevada | Oak Ridge | Oakland | Ohio | Richland | Rocky Flats | SRS | Other | Unknown | Off-site Interface: ▷ | On site Interface: ◇

Rev. 5.0
7/5/00

INEEL HLW Disposition Map

Dataset: IPAB-IS (6/26/00)

PREDECISIONAL DRAFT
This map is conceptual and in many cases does not represent cleanup or transfer decisions; this map does not preclude the on-going regulatory and stakeholder decision-making processes.

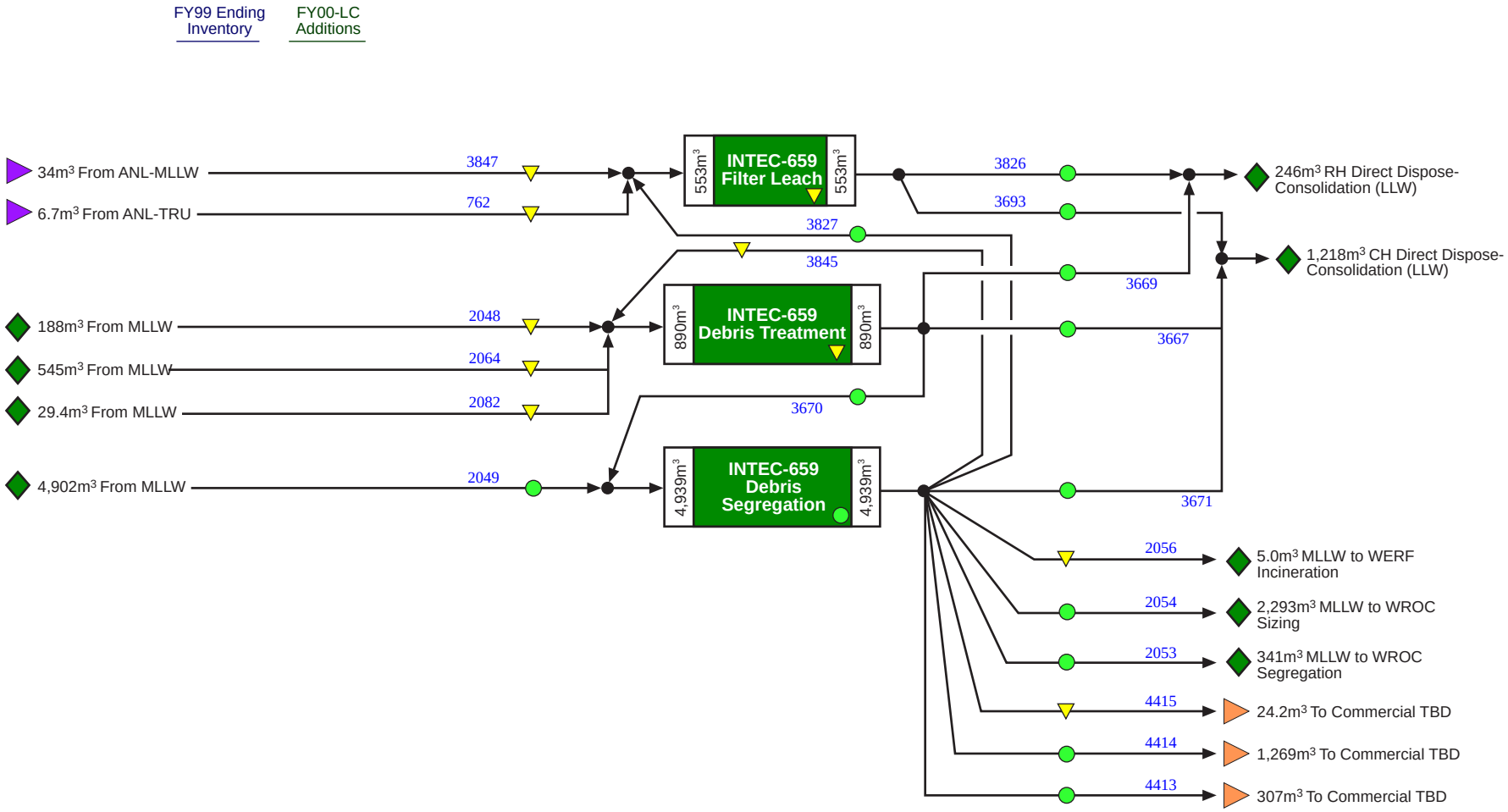

KEY: Albuquerque | Carlsbad | Chicago | Commercial | Idaho | Nevada | Oak Ridge | Oakland | Ohio | Richland | Rocky Flats | SRS | Other | Unknown | Off-site Interface: ▷ | On site Interface: ◇

Rev. 5.0
7/5/00

INEEL LLW Disposition Map

Dataset: IPAB-IS (6/26/00)

PREDECISIONAL DRAFT

This map is conceptual and in many cases does not represent cleanup or transfer decisions; this map does not preclude the on-going regulatory and stakeholder decision-making processes.

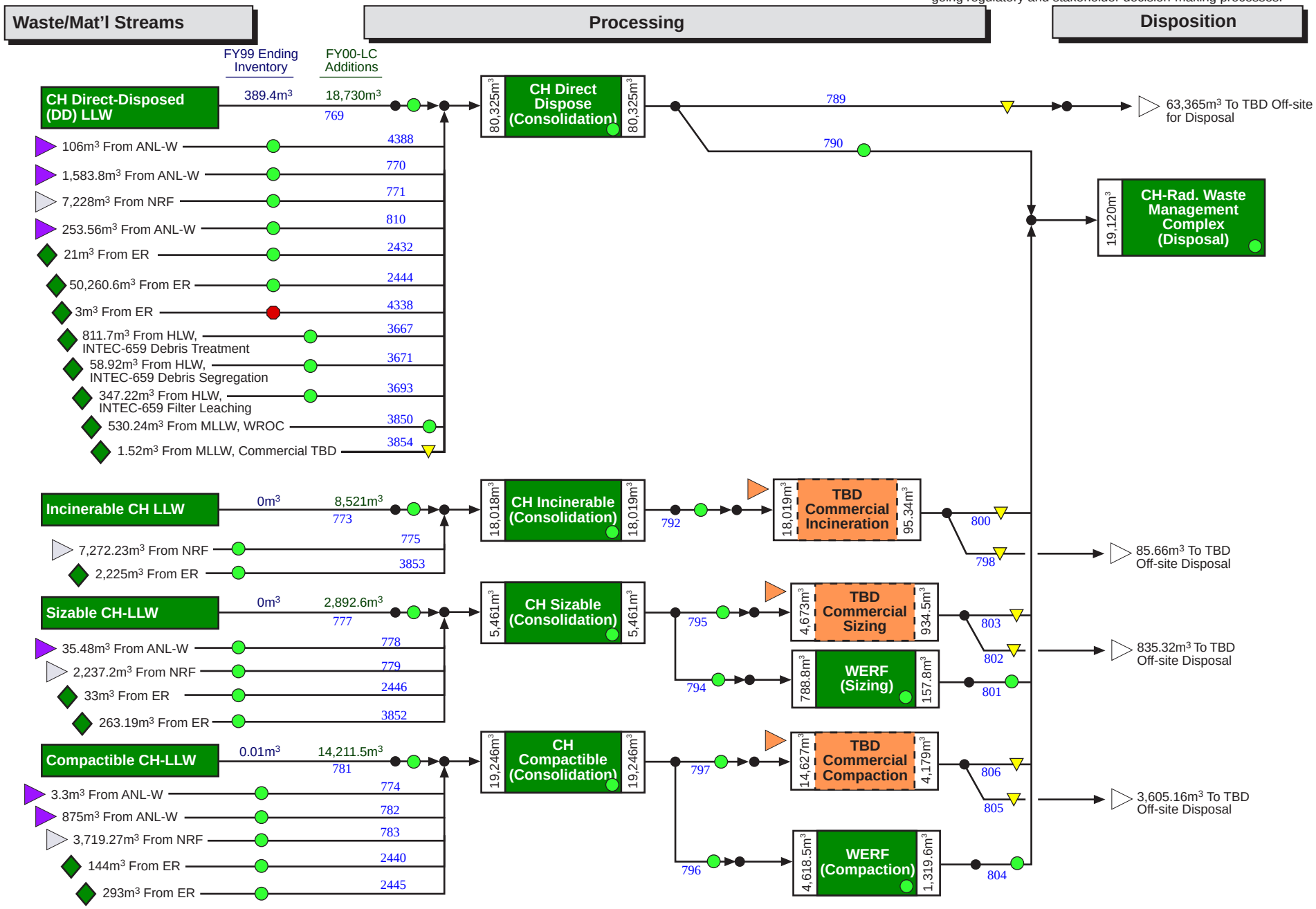

KEY: Albuquerque | Carlsbad | Chicago | Commercial | Idaho | Nevada | Oak Ridge | Oakland | Ohio | Richland | Rocky Flats | SRS | Other | Unknown | Off-site Interface: ▷ | On site Interface: ◇

Rev. 5.0
7/5/00

INEEL LLW Disposition Map

Dataset: IPAB-IS (6/26/00)

PREDECISIONAL DRAFT

This map is conceptual and in many cases does not represent cleanup or transfer decisions; this map does not preclude the on-going regulatory and stakeholder decision-making processes.

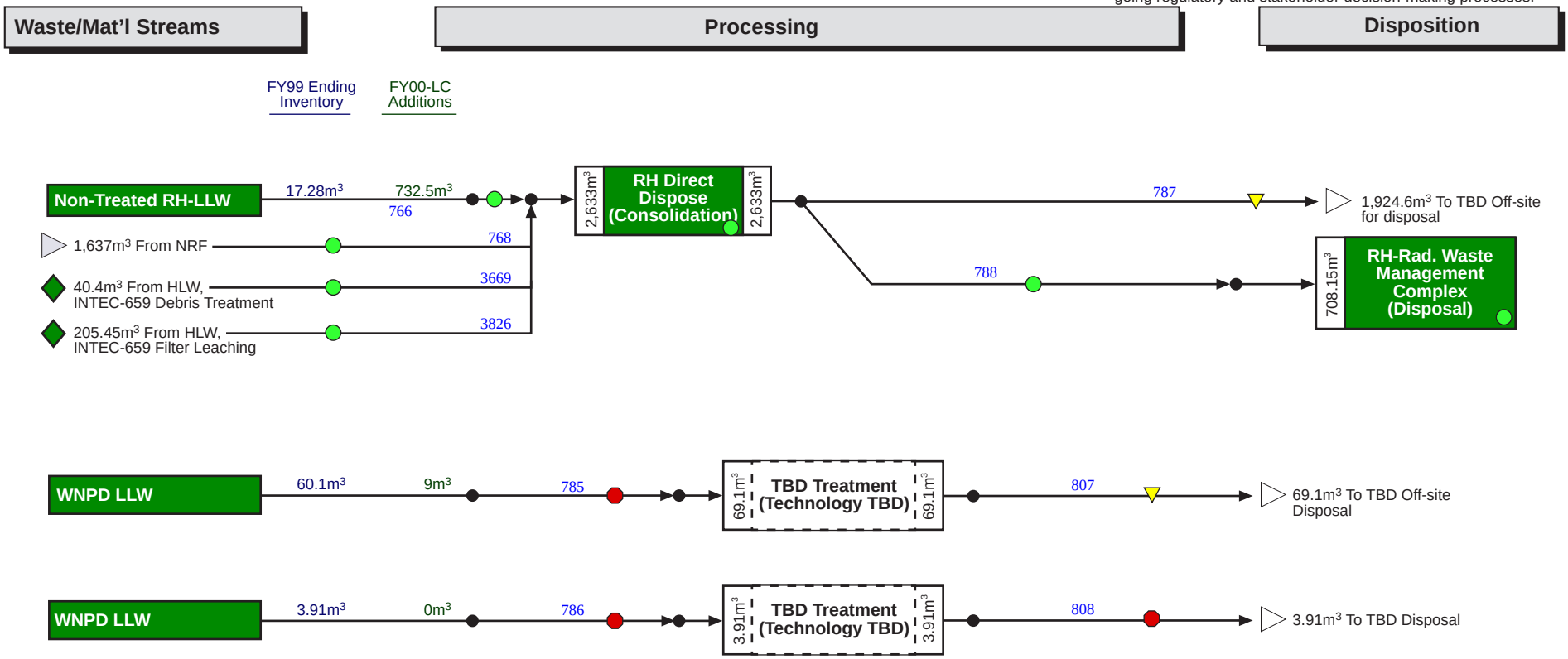

KEY: Albuquerque | Carlsbad | Chicago | Commercial | Idaho | Nevada | Oak Ridge | Oakland | Ohio | Richland | Rocky Flats | SRS | Other | Unknown | Off-site Interface: ▷ | On site Interface: ◇

Rev. 5.0
7/5/00

INEEL MLLW Disposition Map

Dataset: IPAB-IS (6/26/00)

PREDECISIONAL DRAFT
This map is conceptual and in many cases does not represent cleanup or transfer decisions; this map does not preclude the on-going regulatory and stakeholder decision-making processes.

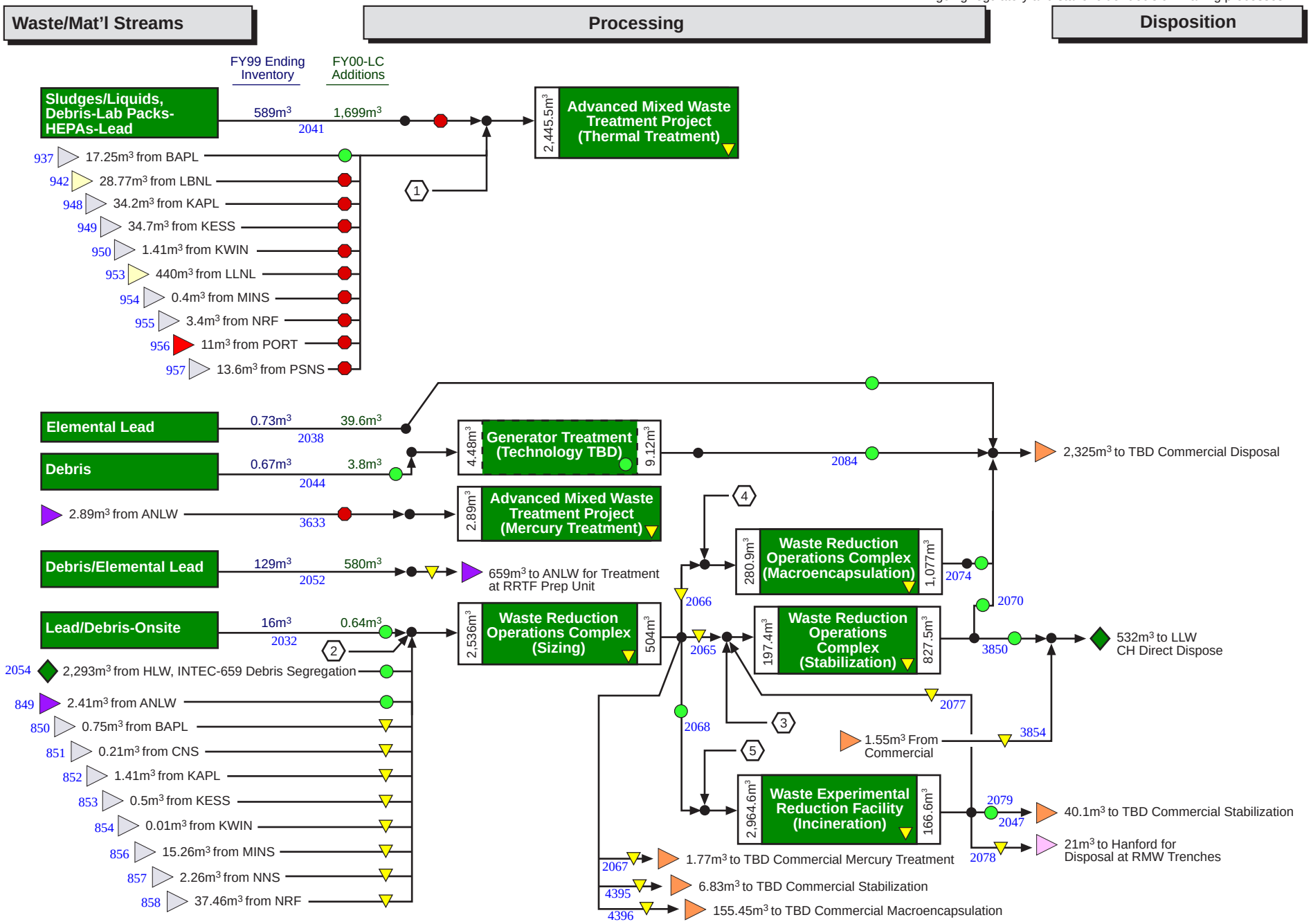

KEY: Albuquerque | Carlsbad | Chicago | Commercial | Idaho | Nevada | Oak Ridge | Oakland | Ohio | Richland | Rocky Flats | SRS | Other | Unknown | Off-site Interface: ▷ | On site Interface: ◇

Rev. 5.0
7/5/00

INEEL MLLW Disposition Map

Dataset: IPAB-IS (6/26/00)

PREDECISIONAL DRAFT
This map is conceptual and in many cases does not represent cleanup or transfer decisions; this map does not preclude the on-going regulatory and stakeholder decision-making processes.

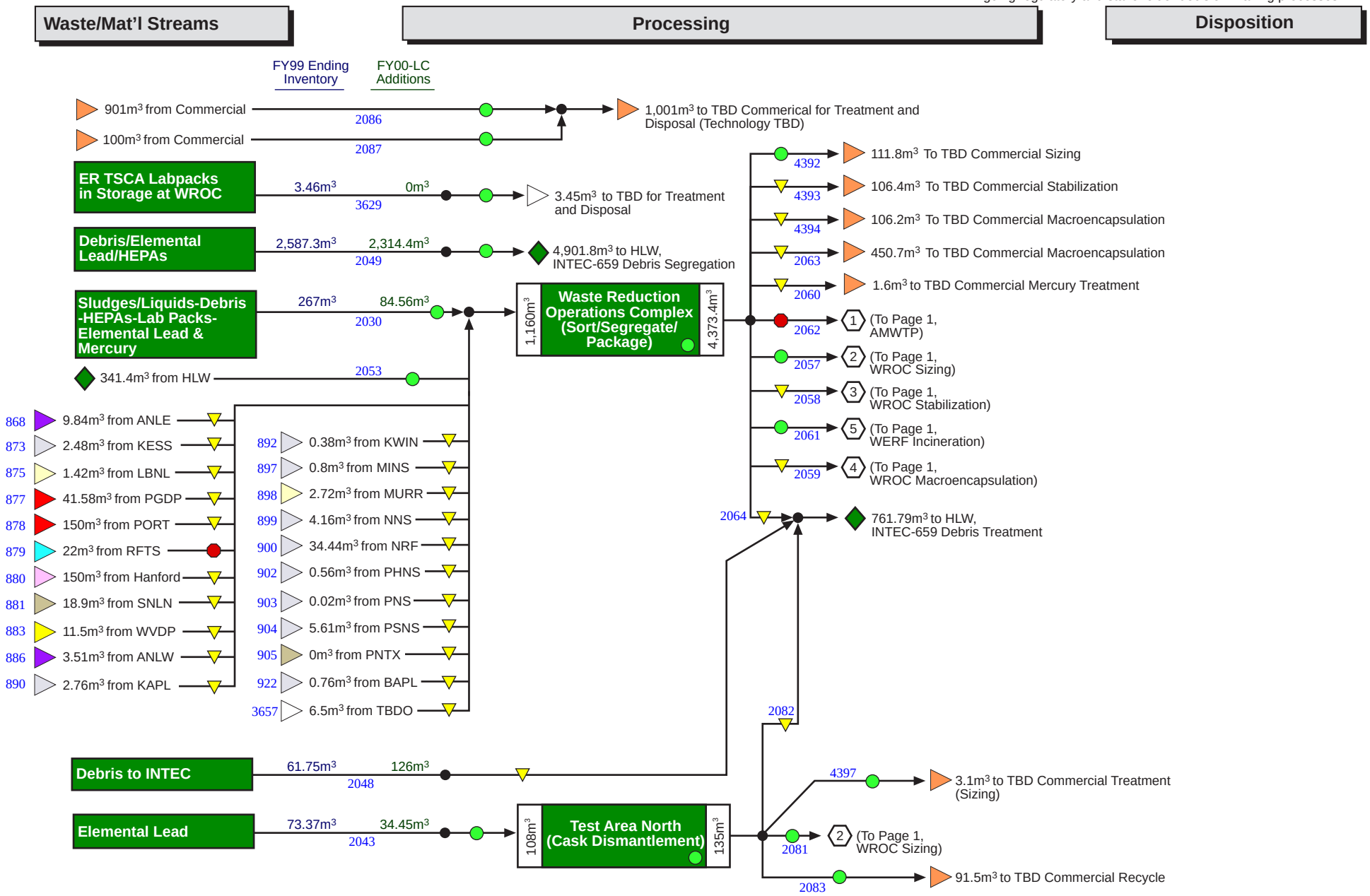

KEY: Albuquerque | Carlsbad | Chicago | Commercial | Idaho | Nevada | Oak Ridge | Oakland | Ohio | Richland | Rocky Flats | SRS | Other | Unknown | Off-site Interface: ▷ | On site Interface: ◇

Rev. 5.0
7/5/00

INEEL MLLW Disposition Map

Dataset: IPAB-IS (6/26/00)

PREDECISIONAL DRAFT
This map is conceptual and in many cases does not represent cleanup or transfer decisions; this map does not preclude the on-going regulatory and stakeholder decision-making processes.

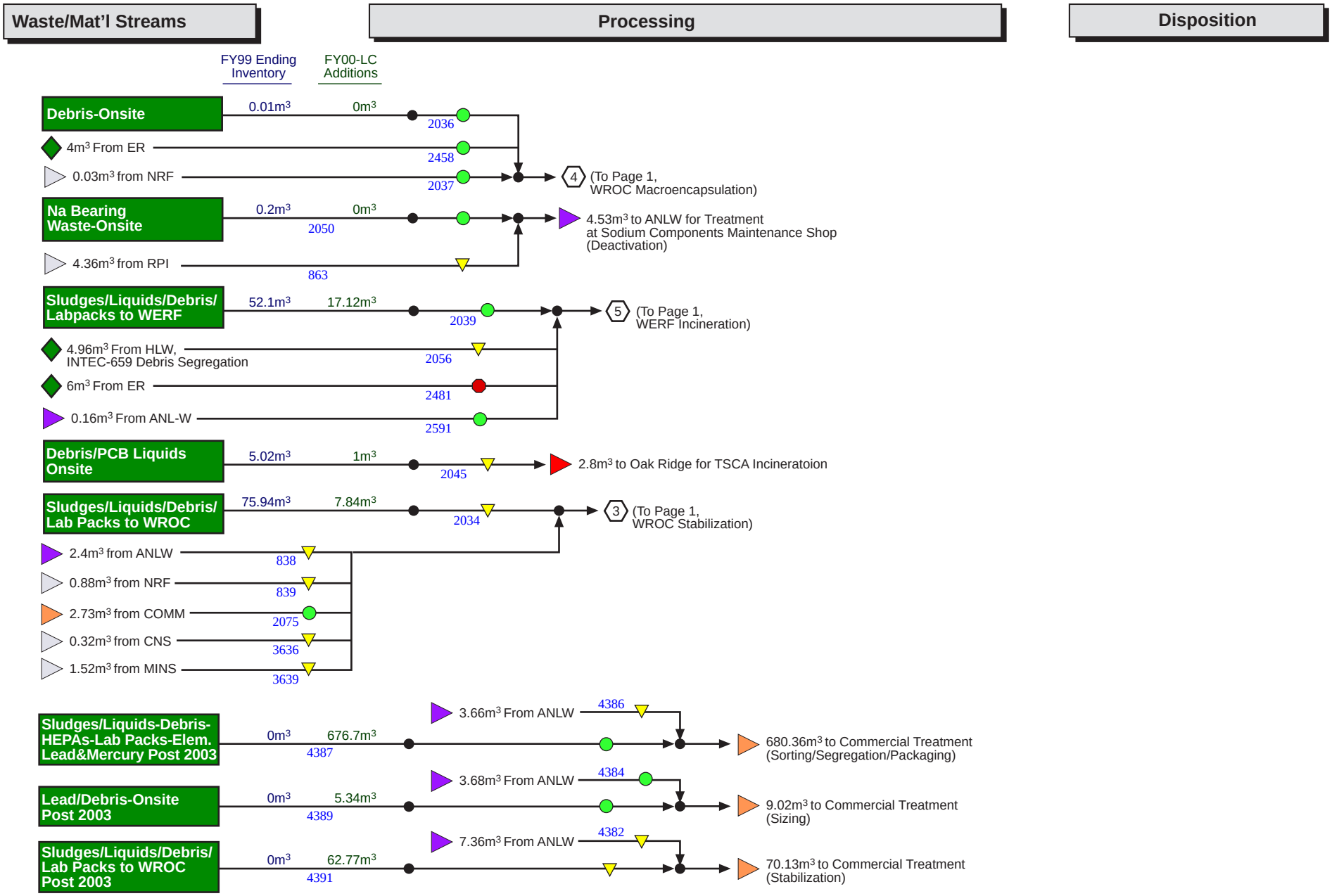

KEY: Albuquerque | Carlsbad | Chicago | Commercial | Idaho | Nevada | Oak Ridge | Oakland | Ohio | Richland | Rocky Flats | SRS | Other | Unknown | Off-site Interface: ▷ | On site Interface: ◇

Rev. 5.0
7/5/00

INEEL SNF Disposition Map

Dataset: IPAB-IS (6/26/00)

PREDECISIONAL DRAFT

This map is conceptual and in many cases does not represent cleanup or transfer decisions; this map does not preclude the on-going regulatory and stakeholder decision-making processes.

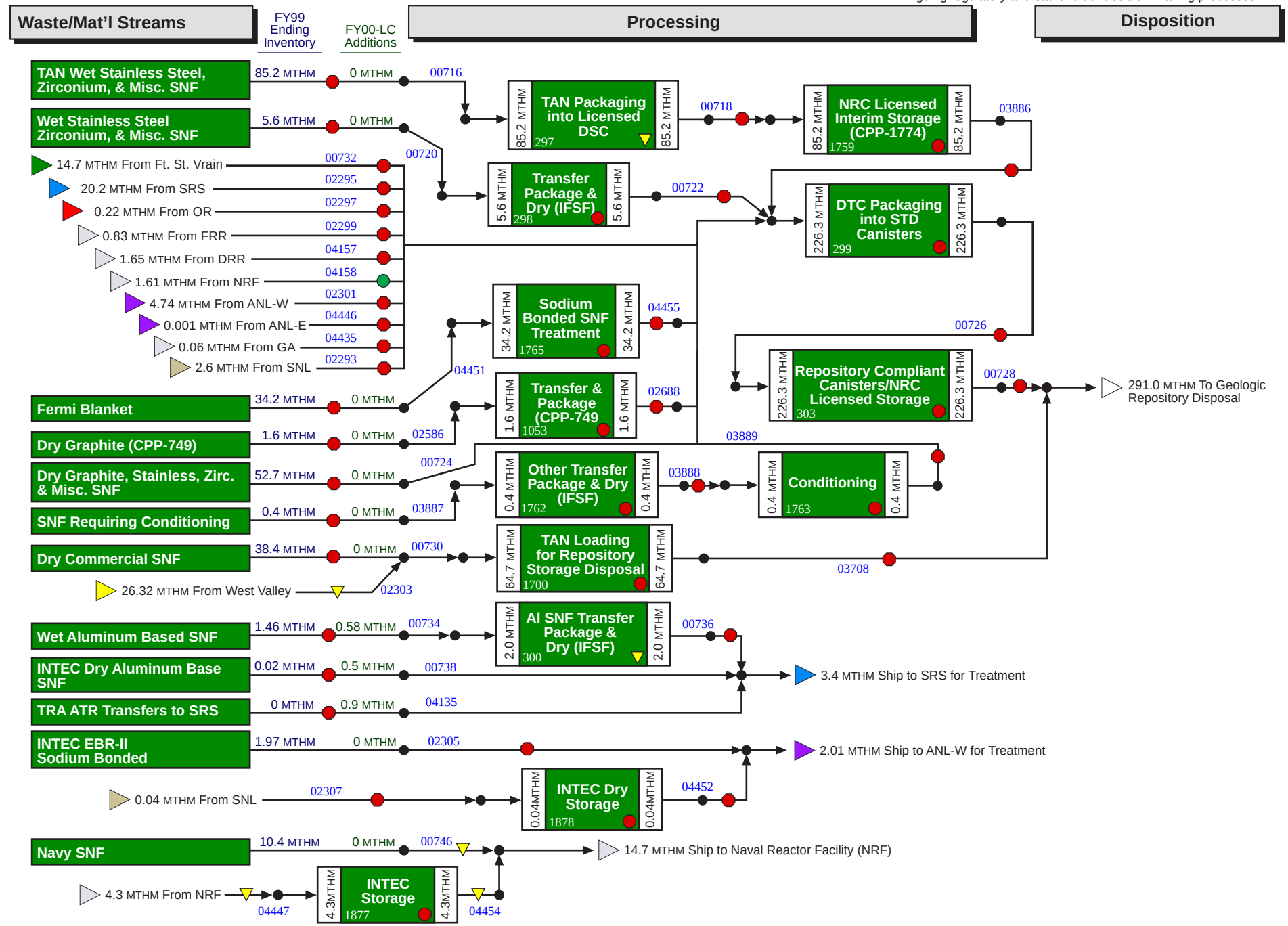

Rev. 5.0
7/5/00

INEEL TRU Disposition Map

Dataset: IPAB-IS (6/26/00)

PREDECISIONAL DRAFT

This map is conceptual and in many cases does not represent cleanup or transfer decisions; this map does not preclude the on-going regulatory and stakeholder decision-making processes.

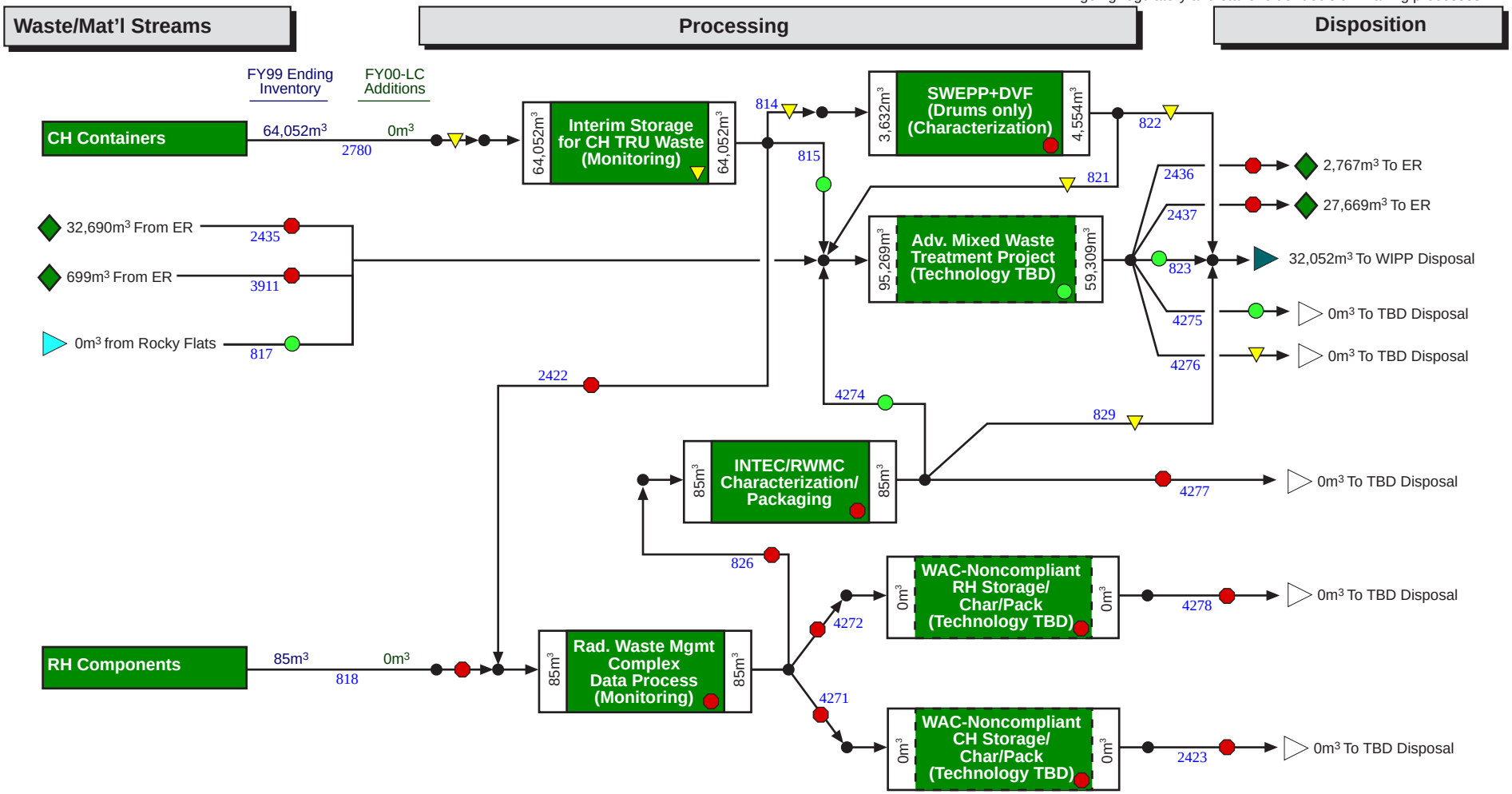

KEY: Albuquerque | Carlsbad | Chicago | Commercial | Idaho | Nevada | Oak Ridge | Oakland | Ohio | Richland | Rocky Flats | SRS | Other | Unknown | Off-site Interface: ▷ | On site Interface: ◇

Rev. 5.0
7/5/00