# ITRI LLW Disposition Map

**Dataset: IPAB-IS (6/26/00)**

**PREDECISIONAL DRAFT**

This map is conceptual and in many cases does not represent cleanup or transfer decisions; this map does not preclude the on-going regulatory and stakeholder decision-making processes.

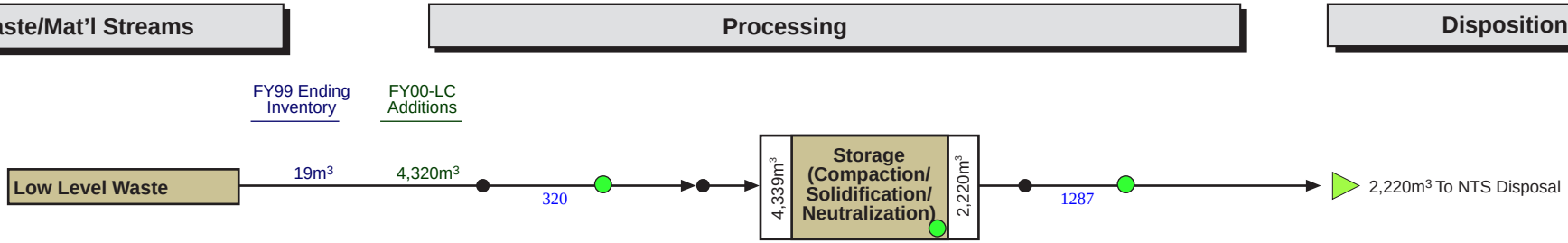


KEY: Albuquerque | Carlsbad | Chicago | Commercial | Idaho | Nevada | Oak Ridge | Oakland | Ohio | Richland | Rocky Flats | SRS | Other | Unknown | Off-site Interface: ▷ | On site Interface: ◇

Rev. 5.0
6/30/00

# Kansas City LLW Disposition Map

**Dataset: IPAB-IS (6/26/00)**

**PREDECISIONAL DRAFT**

This map is conceptual and in many cases does not represent cleanup or transfer decisions; this map does not preclude the on-going regulatory and stakeholder decision-making processes.

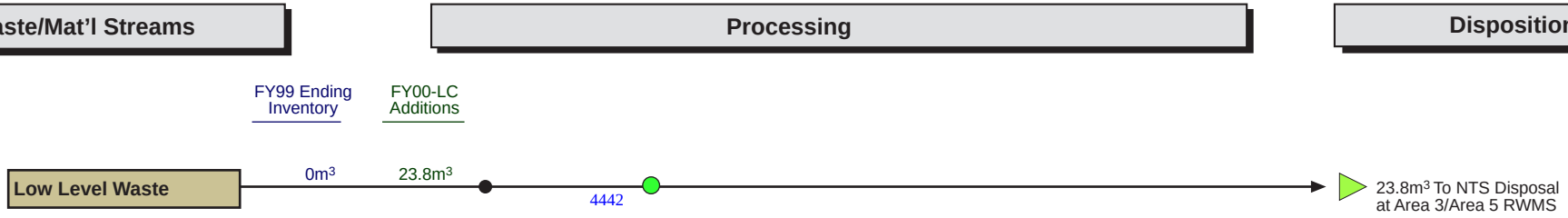


KEY: Albuquerque | Carlsbad | Chicago | Commercial | Idaho | Nevada | Oak Ridge | Oakland | Ohio | Richland | Rocky Flats | SRS | Other | Unknown | Off-site Interface: ▷ | On site Interface: ◇

Rev. 5.0
6/30/00

# LANL LLW Disposition Map

**Dataset: IPAB-IS (6/26/00)**

**PREDECISIONAL DRAFT**

This map is conceptual and in many cases does not represent cleanup or transfer decisions; this map does not preclude the on-going regulatory and stakeholder decision-making processes.

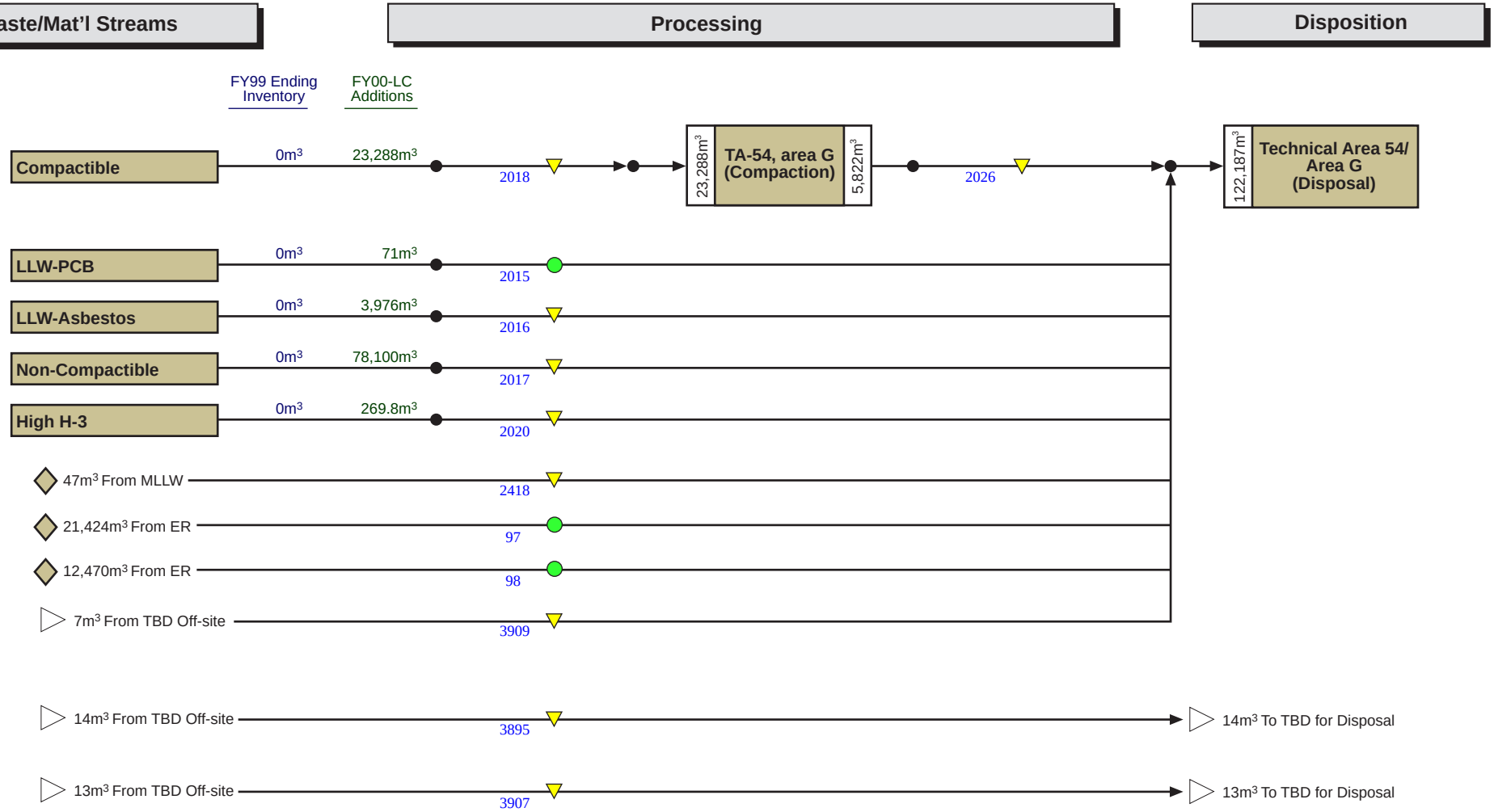


KEY: Albuquerque | Carlsbad | Chicago | Commercial | Idaho | Nevada | Oak Ridge | Oakland | Ohio | Richland | Rocky Flats | SRS | Other | Unknown | Off-site Interface: ▷ | On site Interface: ◇

Rev. 5.0
6/30/00

# Pantex LLW Disposition Map

**Dataset: IPAB-IS (6/26/00)**

**PREDECISIONAL DRAFT**

This map is conceptual and in many cases does not represent cleanup or transfer decisions; this map does not preclude the on-going regulatory and stakeholder decision-making processes.

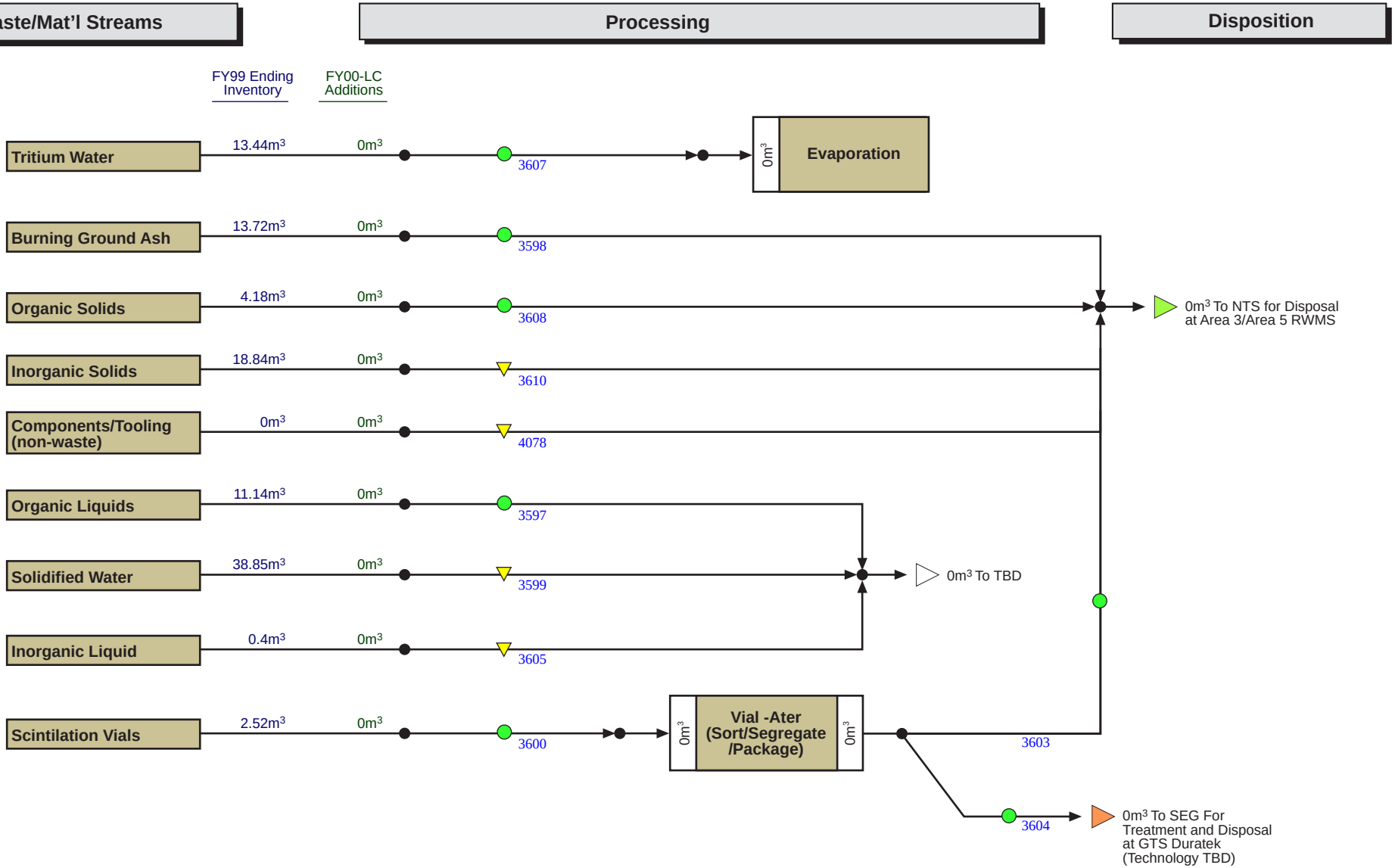


KEY: Albuquerque | Carlsbad | Chicago | Commercial | Idaho | Nevada | Oak Ridge | Oakland | Ohio | Richland | Rocky Flats | SRS | Other | Unknown | Off-site Interface: ▷ | On site Interface: ◇

Rev. 5.0
6/30/00

# SNL LLW Disposition Map

**Dataset: IPAB-IS (6/26/00)**

**PREDECISIONAL DRAFT**

This map is conceptual and in many cases does not represent cleanup or transfer decisions; this map does not preclude the on-going regulatory and stakeholder decision-making processes.

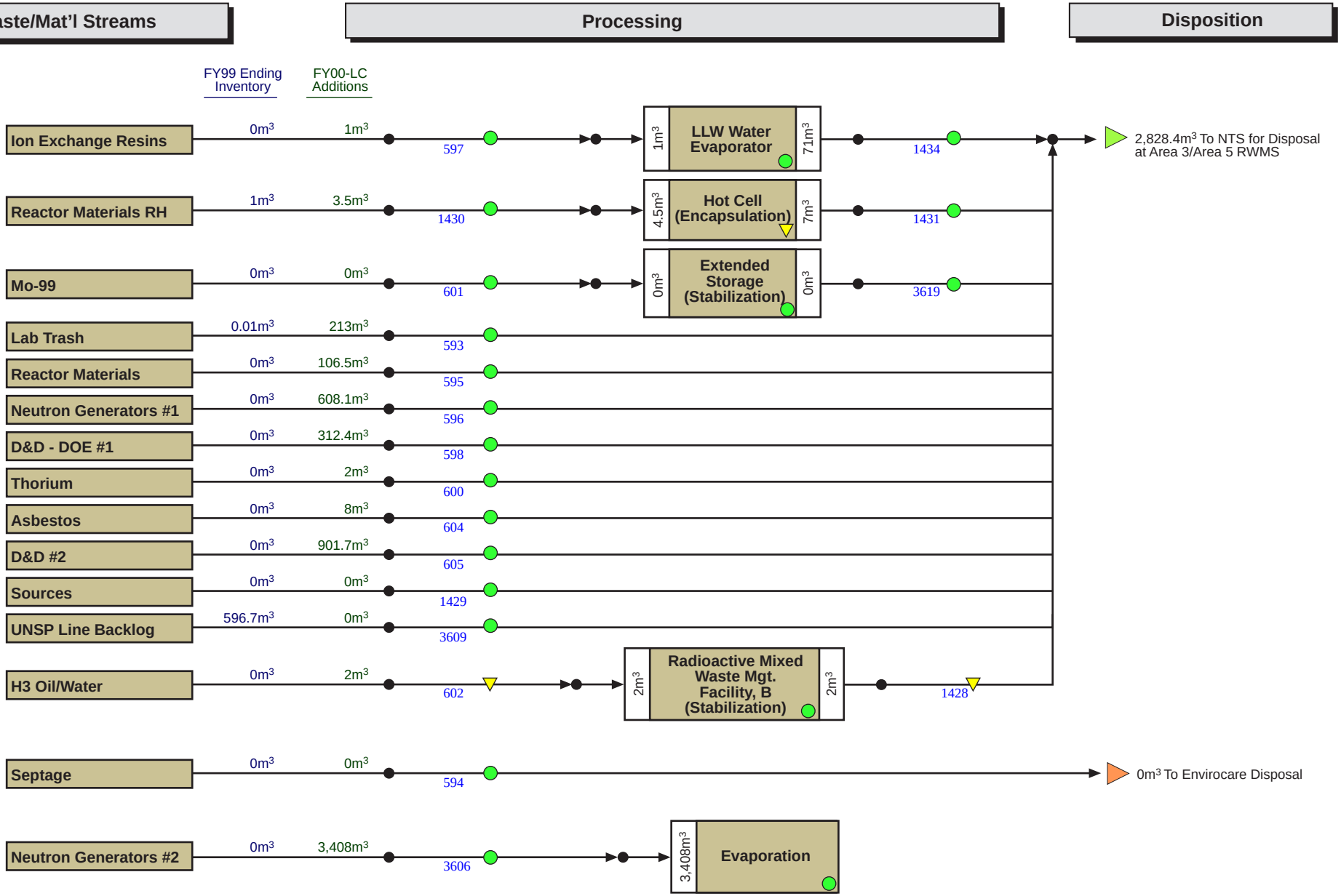


KEY: Albuquerque | Carlsbad | Chicago | Commercial | Idaho | Nevada | Oak Ridge | Oakland | Ohio | Richland | Rocky Flats | SRS | Other | Unknown | Off-site Interface: ▷ | On site Interface: ◇

Rev. 5.0
6/30/00

# AMES LLW Disposition Map

**Dataset: IPAB-IS (6/26/00)**

**PREDECISIONAL DRAFT**

This map is conceptual and in many cases does not represent cleanup or transfer decisions; this map does not preclude the on-going regulatory and stakeholder decision-making processes.

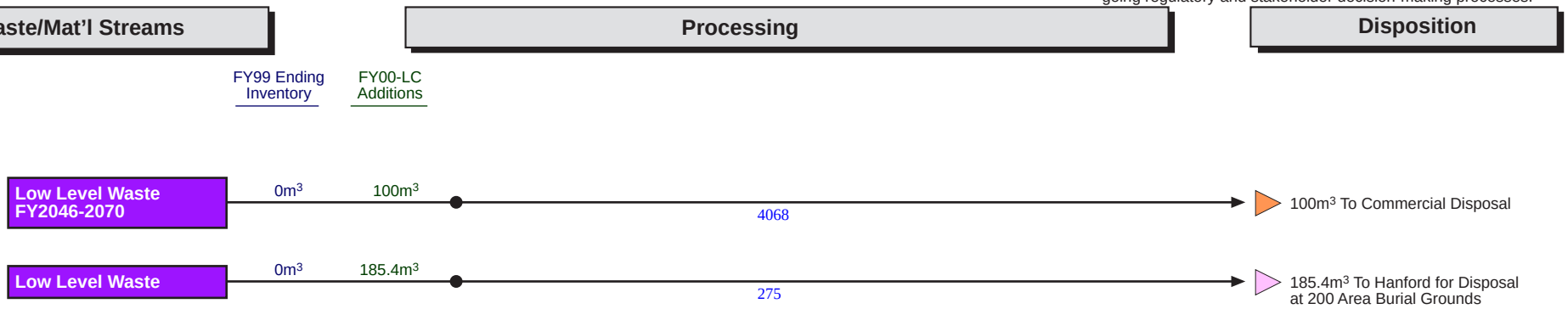


KEY: Albuquerque | Carlsbad | Chicago | Commercial | Idaho | Nevada | Oak Ridge | Oakland | Ohio | Richland | Rocky Flats | SRS | Other | Unknown | Off-site Interface: ▷ | On site Interface: ◇

Rev. 5.0
7/3/00

# ANL-E LLW Disposition Map

**Dataset: IPAB-IS (6/26/00)**

**PREDECISIONAL DRAFT**
This map is conceptual and in many cases does not represent cleanup or transfer decisions; this map does not preclude the on-going regulatory and stakeholder decision-making processes.

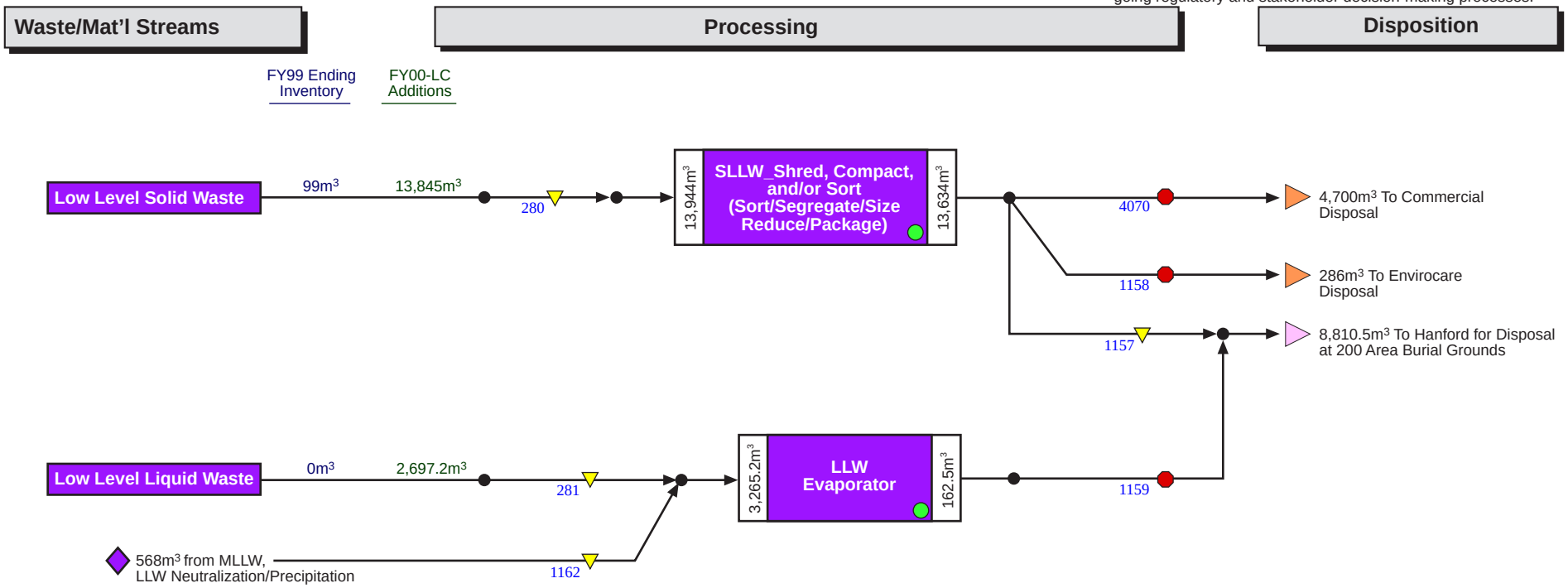


KEY: Albuquerque | Carlsbad | Chicago | Commercial | Idaho | Nevada | Oak Ridge | Oakland | Ohio | Richland | Rocky Flats | SRS | Other | Unknown | Off-site Interface: ▷ | On site Interface: ◇

Rev. 5.0
7/3/00

# ANL-W LLW Disposition Map

**Dataset: IPAB-IS (6/26/00)**

**PREDECISIONAL DRAFT**

This map is conceptual and in many cases does not represent cleanup or transfer decisions; this map does not preclude the on-going regulatory and stakeholder decision-making processes.

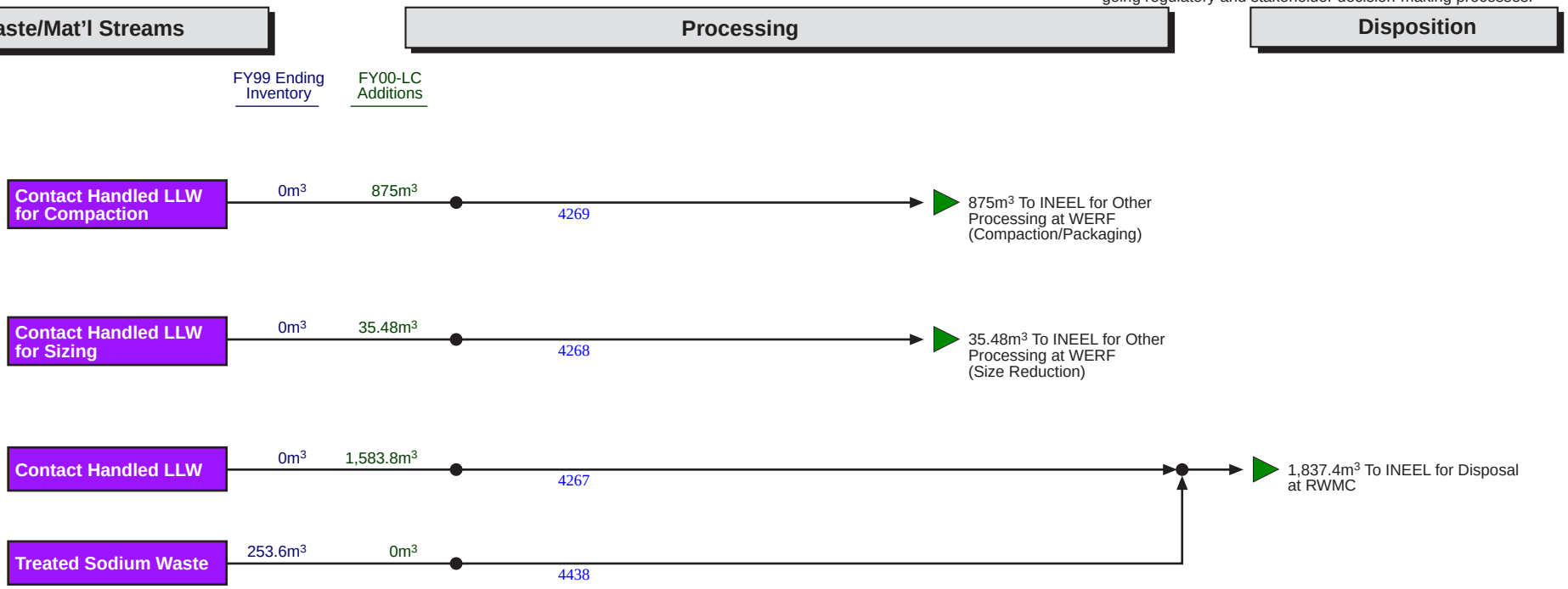


KEY: Albuquerque | Carlsbad | Chicago | Commercial | Idaho | Nevada | Oak Ridge | Oakland | Ohio | Richland | Rocky Flats | SRS | Other | Unknown | Off-site Interface: ▷ | On site Interface: ◇

Rev. 5.0
7/3/00

# Brookhaven LLW Disposition Map

**Dataset: IPAB-IS (6/26/00)**

**PREDECISIONAL DRAFT**

This map is conceptual and in many cases does not represent cleanup or transfer decisions; this map does not preclude the on-going regulatory and stakeholder decision-making processes.

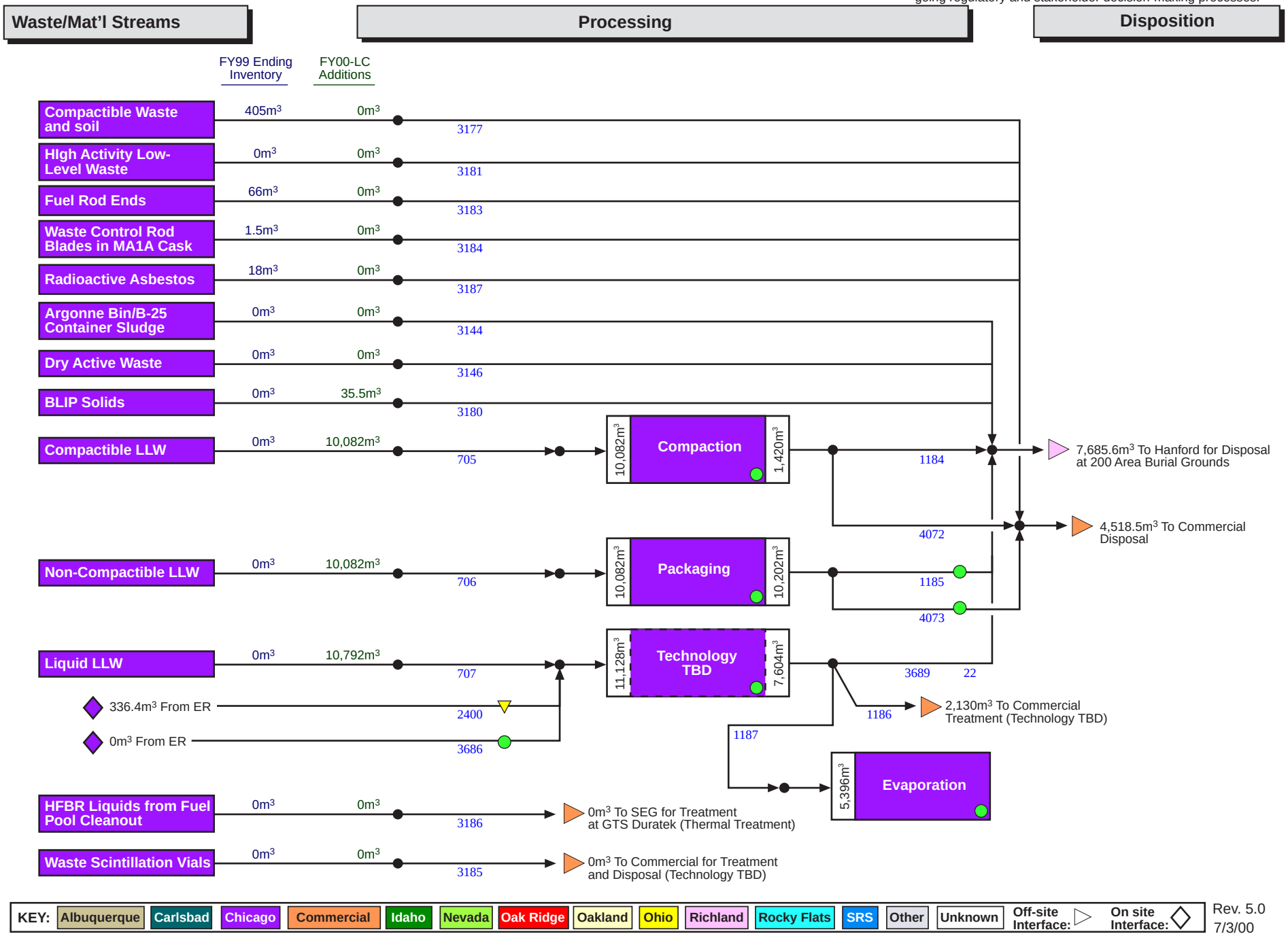


KEY: Albuquerque | Carlsbad | Chicago | Commercial | Idaho | Nevada | Oak Ridge | Oakland | Ohio | Richland | Rocky Flats | SRS | Other | Unknown | Off-site Interface: ▷ | On site Interface: ◇

Rev. 5.0
7/3/00

# Fermi LLW Disposition Map

**Dataset: IPAB-IS (6/26/00)**

**PREDECISIONAL DRAFT**

This map is conceptual and in many cases does not represent cleanup or transfer decisions; this map does not preclude the on-going regulatory and stakeholder decision-making processes.

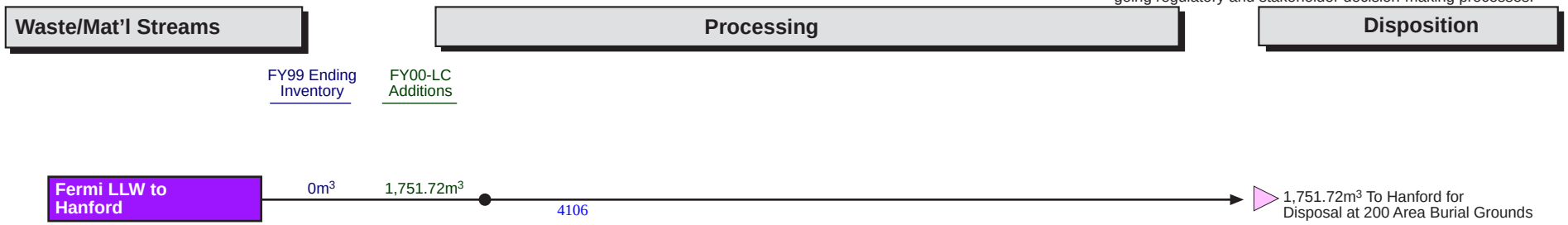


KEY: Albuquerque | Carlsbad | Chicago | Commercial | Idaho | Nevada | Oak Ridge | Oakland | Ohio | Richland | Rocky Flats | SRS | Other | Unknown | Off-site Interface: ▷ | On site Interface: ◇

Rev. 5.0
7/3/00

# Princeton LLW Disposition Map

**Dataset: IPAB-IS (6/26/00)**

**PREDECISIONAL DRAFT**
This map is conceptual and in many cases does not represent cleanup or transfer decisions; this map does not preclude the on-going regulatory and stakeholder decision-making processes.

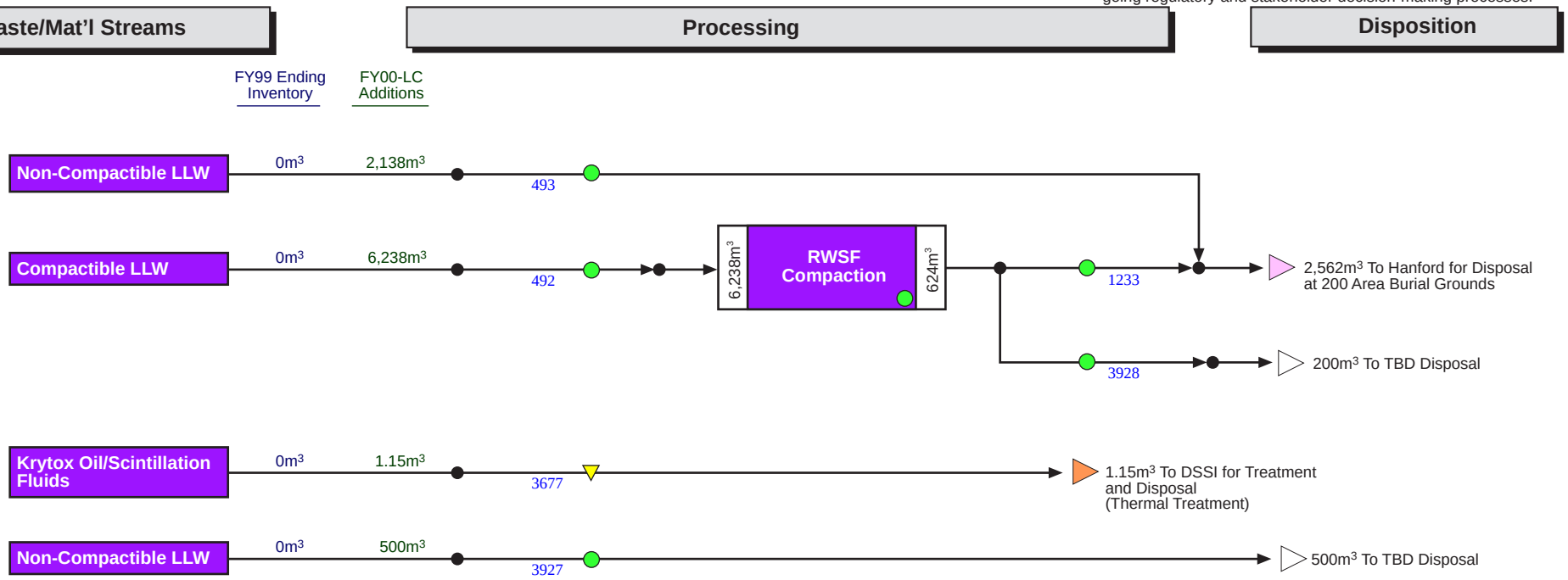


KEY: Albuquerque | Carlsbad | Chicago | Commercial | Idaho | Nevada | Oak Ridge | Oakland | Ohio | Richland | Rocky Flats | SRS | Other | Unknown | Off-site Interface: ▷ | On site Interface: ◇

Rev. 5.0
7/3/00

# INEEL LLW Disposition Map

**Dataset: IPAB-IS (6/26/00)**

**PREDECISIONAL DRAFT**

This map is conceptual and in many cases does not represent cleanup or transfer decisions; this map does not preclude the on-going regulatory and stakeholder decision-making processes.

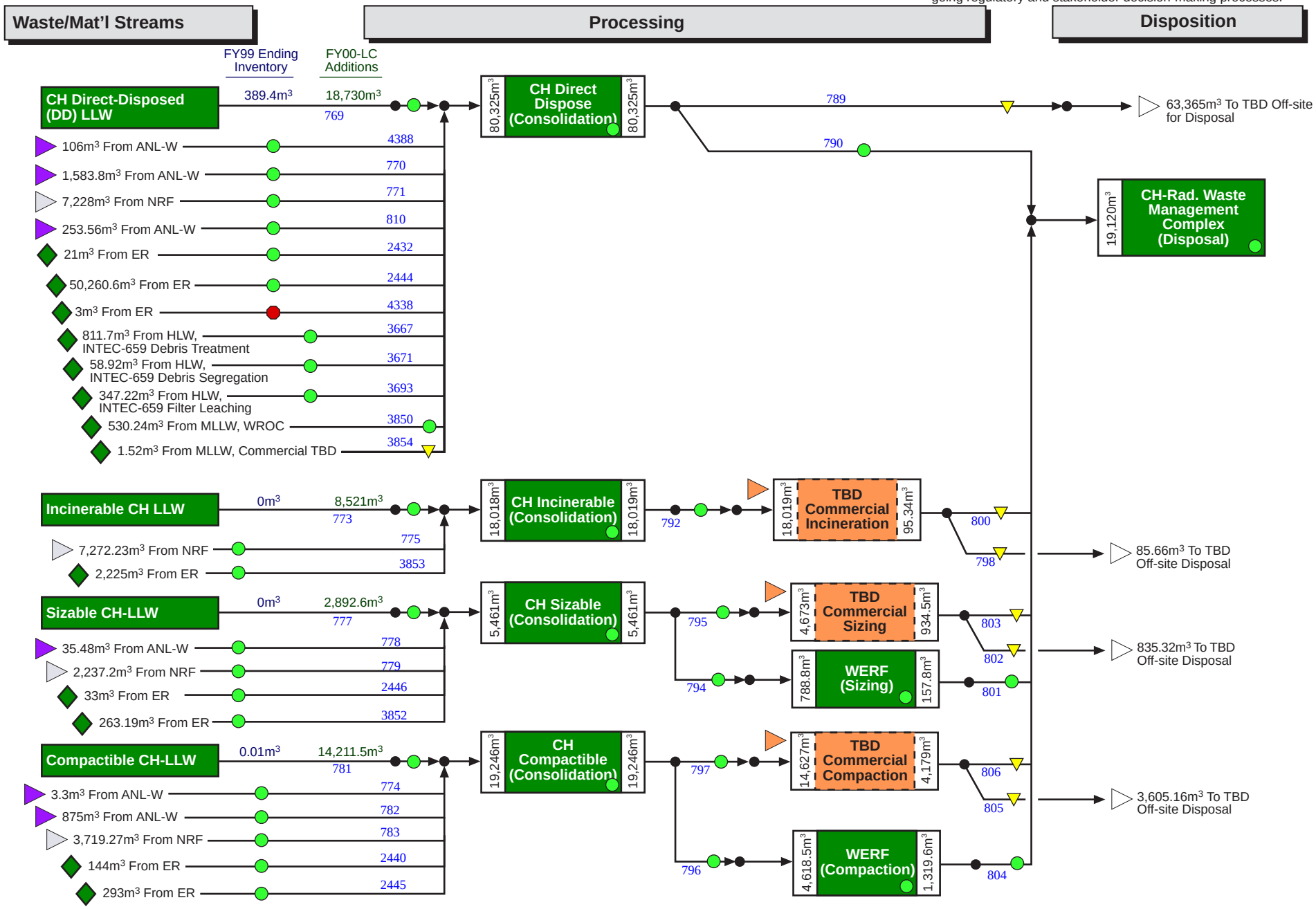


KEY: Albuquerque | Carlsbad | Chicago | Commercial | Idaho | Nevada | Oak Ridge | Oakland | Ohio | Richland | Rocky Flats | SRS | Other | Unknown | Off-site Interface: ▷ | On site Interface: ◇

Rev. 5.0
7/5/00

# INEEL LLW Disposition Map

**Dataset: IPAB-IS (6/26/00)**

**PREDECISIONAL DRAFT**

This map is conceptual and in many cases does not represent cleanup or transfer decisions; this map does not preclude the on-going regulatory and stakeholder decision-making processes.

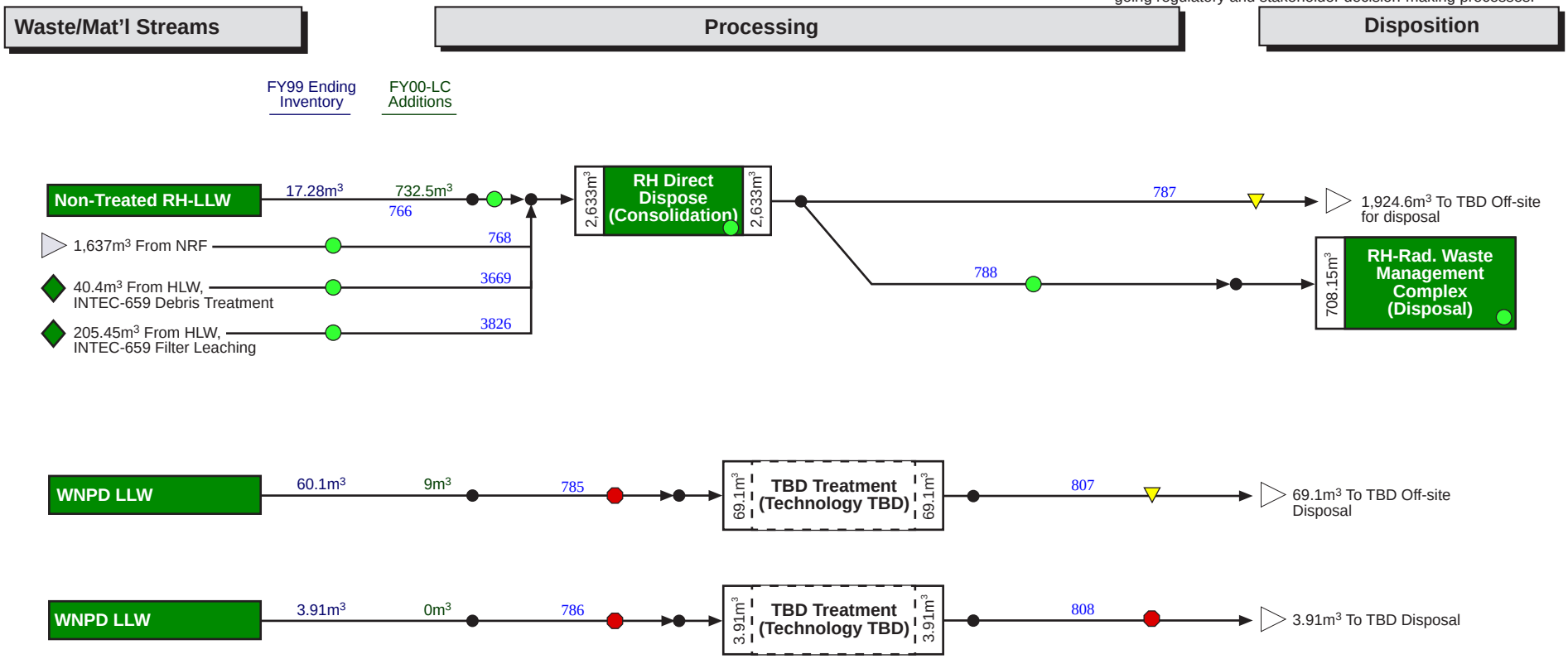


KEY: Albuquerque | Carlsbad | Chicago | Commercial | Idaho | Nevada | Oak Ridge | Oakland | Ohio | Richland | Rocky Flats | SRS | Other | Unknown | Off-site Interface: ▷ | On site Interface: ◇

Rev. 5.0
7/5/00

# NTS LLW Disposition Map

**Dataset: IPAB-IS (6/26/00)**

**PREDECISIONAL DRAFT**
This map is conceptual and in many cases does not represent cleanup or transfer decisions; this map does not preclude the on-going regulatory and stakeholder decision-making processes.

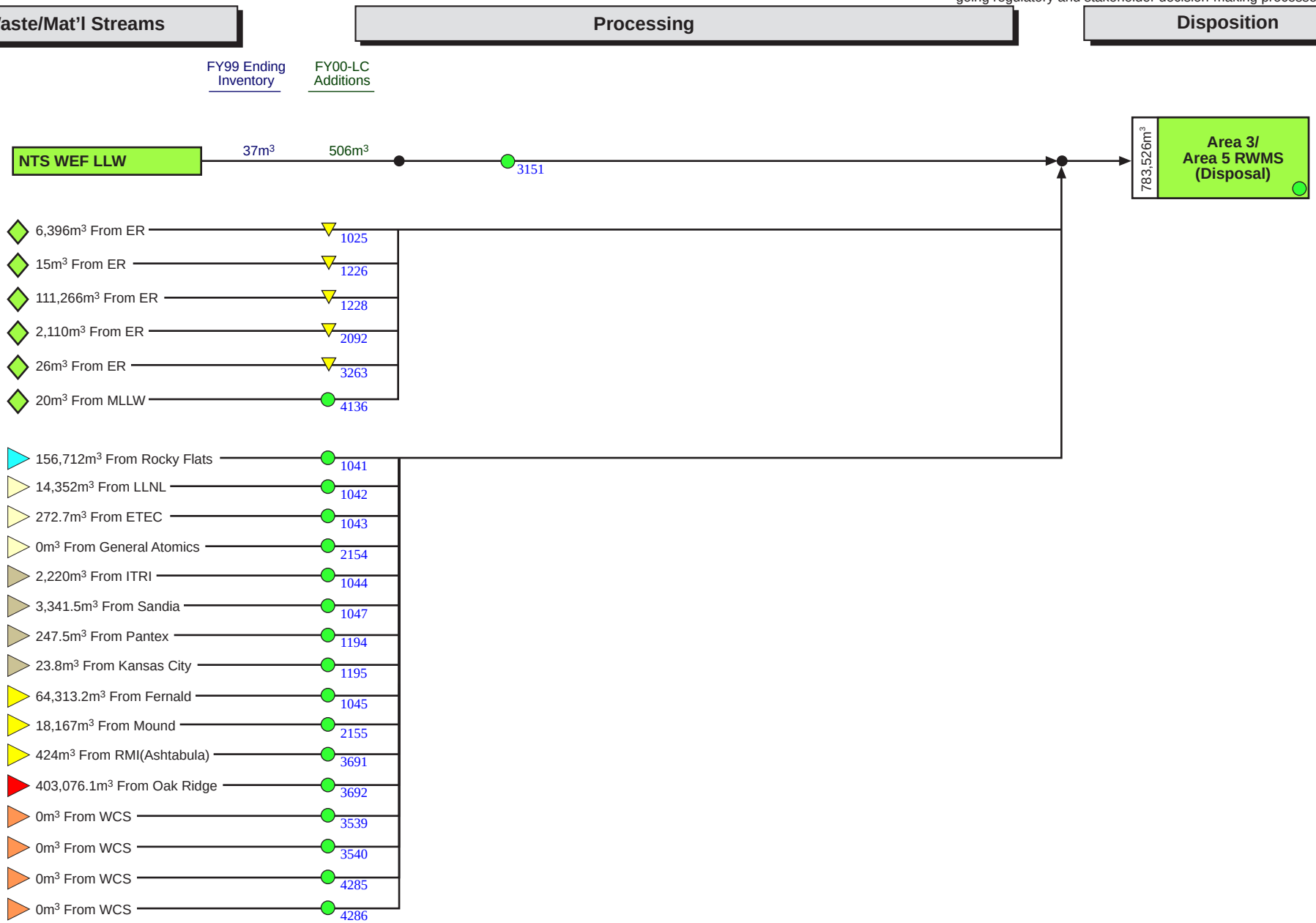


KEY: Albuquerque | Carlsbad | Chicago | Commercial | Idaho | Nevada | Oak Ridge | Oakland | Ohio | Richland | Rocky Flats | SRS | Other | Unknown | Off-site Interface: ▷ | On site Interface: ◇

Rev. 5.0
6/29/00

# Oak Ridge LLW Disposition Map

**Dataset: IPAB-IS (6/26/00)**

**PREDECISIONAL DRAFT**
This map is conceptual and in many cases does not represent cleanup or transfer decisions; this map does not preclude the on-going regulatory and stakeholder decision-making processes.

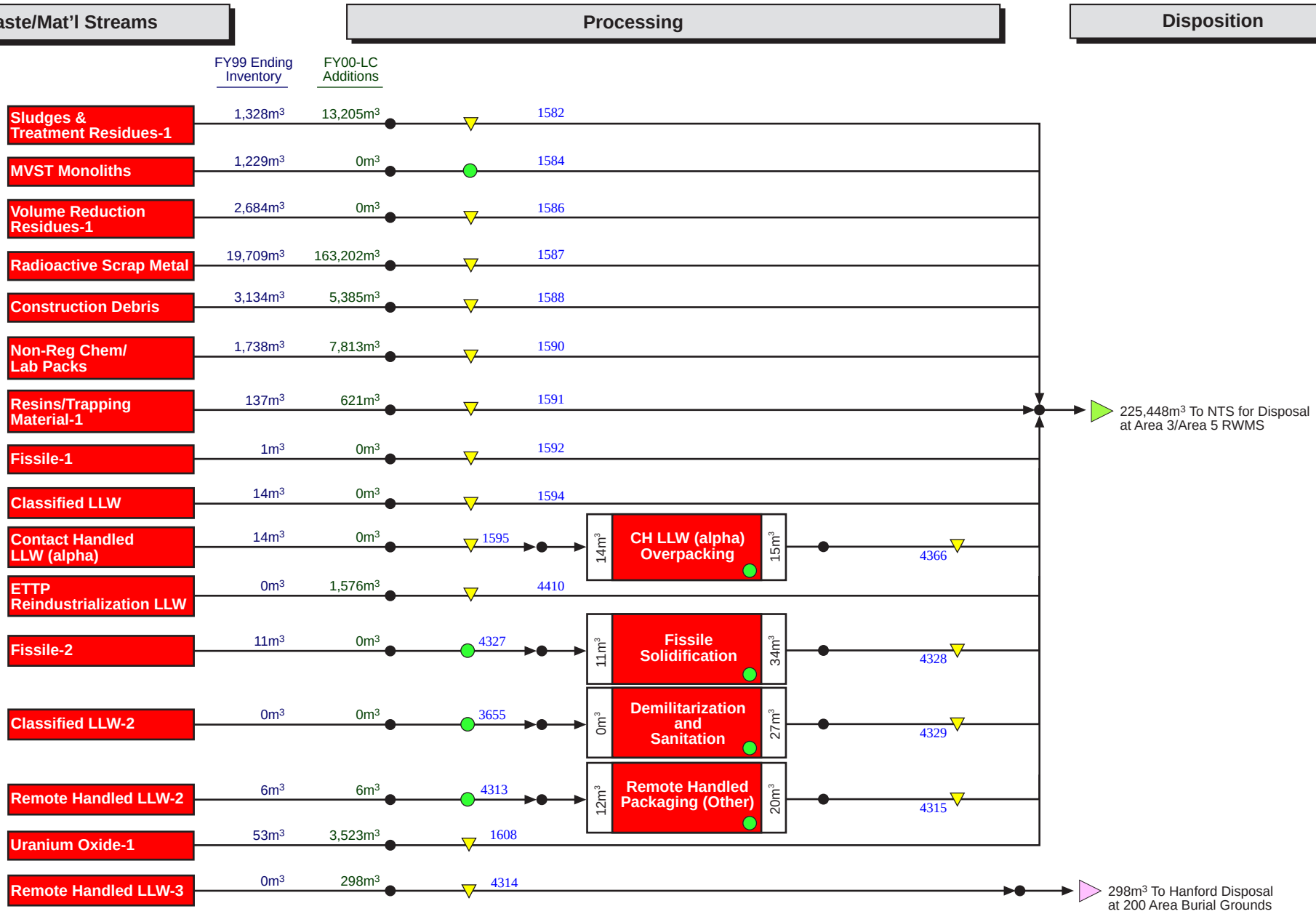


KEY: Albuquerque | Carlsbad | Chicago | Commercial | Idaho | Nevada | Oak Ridge | Oakland | Ohio | Richland | Rocky Flats | SRS | Other | Unknown | Off-site Interface: ▷ | On site Interface: ◇

Rev. 5.0
7/5/00

# Oak Ridge LLW Disposition Map

**Dataset: IPAB-IS (6/26/00)**

**PREDECISIONAL DRAFT**

This map is conceptual and in many cases does not represent cleanup or transfer decisions; this map does not preclude the on-going regulatory and stakeholder decision-making processes.

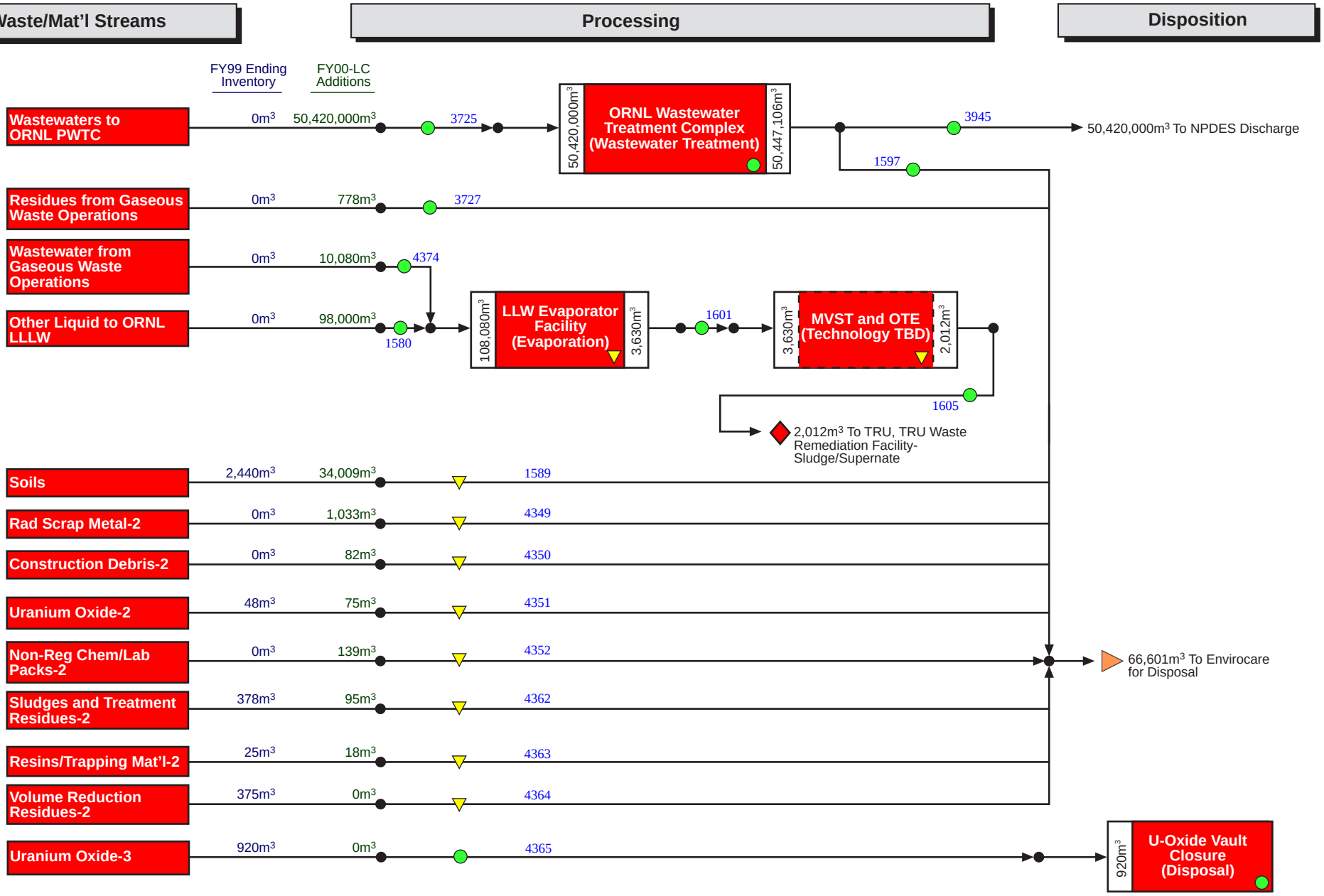


KEY: Albuquerque | Carlsbad | Chicago | Commercial | Idaho | Nevada | Oak Ridge | Oakland | Ohio | Richland | Rocky Flats | SRS | Other | Unknown | Off-site Interface: ▷ | On site Interface: ◇

Rev. 5.0
7/5/00

# Oak Ridge LLW Disposition Map

**Dataset: IPAB-IS (6/26/00)**

**PREDECISIONAL DRAFT**

This map is conceptual and in many cases does not represent cleanup or transfer decisions; this map does not preclude the on-going regulatory and stakeholder decision-making processes.

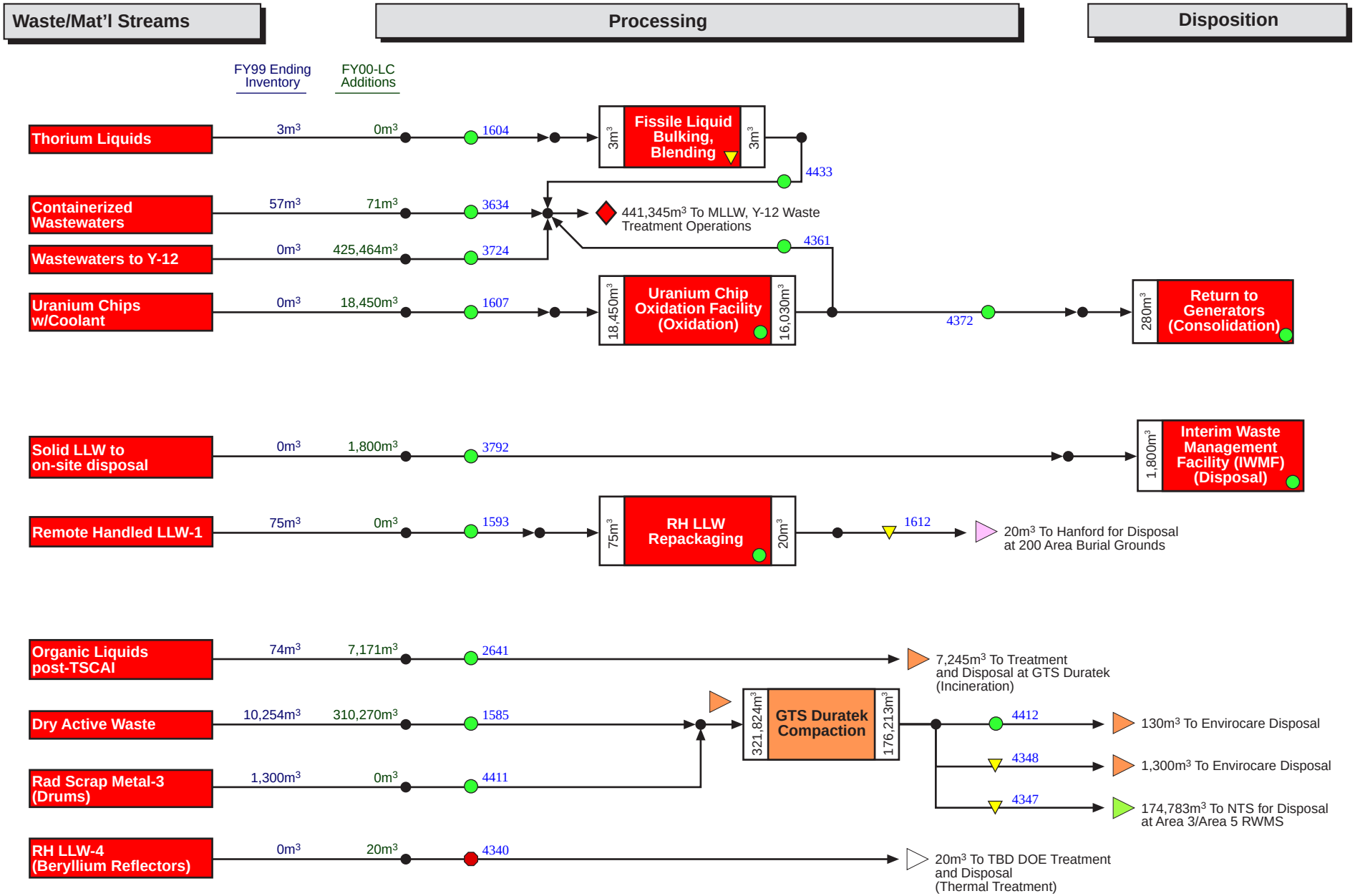


KEY: Albuquerque | Carlsbad | Chicago | Commercial | Idaho | Nevada | Oak Ridge | Oakland | Ohio | Richland | Rocky Flats | SRS | Other | Unknown | Off-site Interface: ▷ | On site Interface: ◇

Rev. 5.0
7/5/00

# Paducah LLW Disposition Map

**Dataset: IPAB-IS (6/26/00)**

**PREDECISIONAL DRAFT**
This map is conceptual and in many cases does not represent cleanup or transfer decisions; this map does not preclude the on-going regulatory and stakeholder decision-making processes.

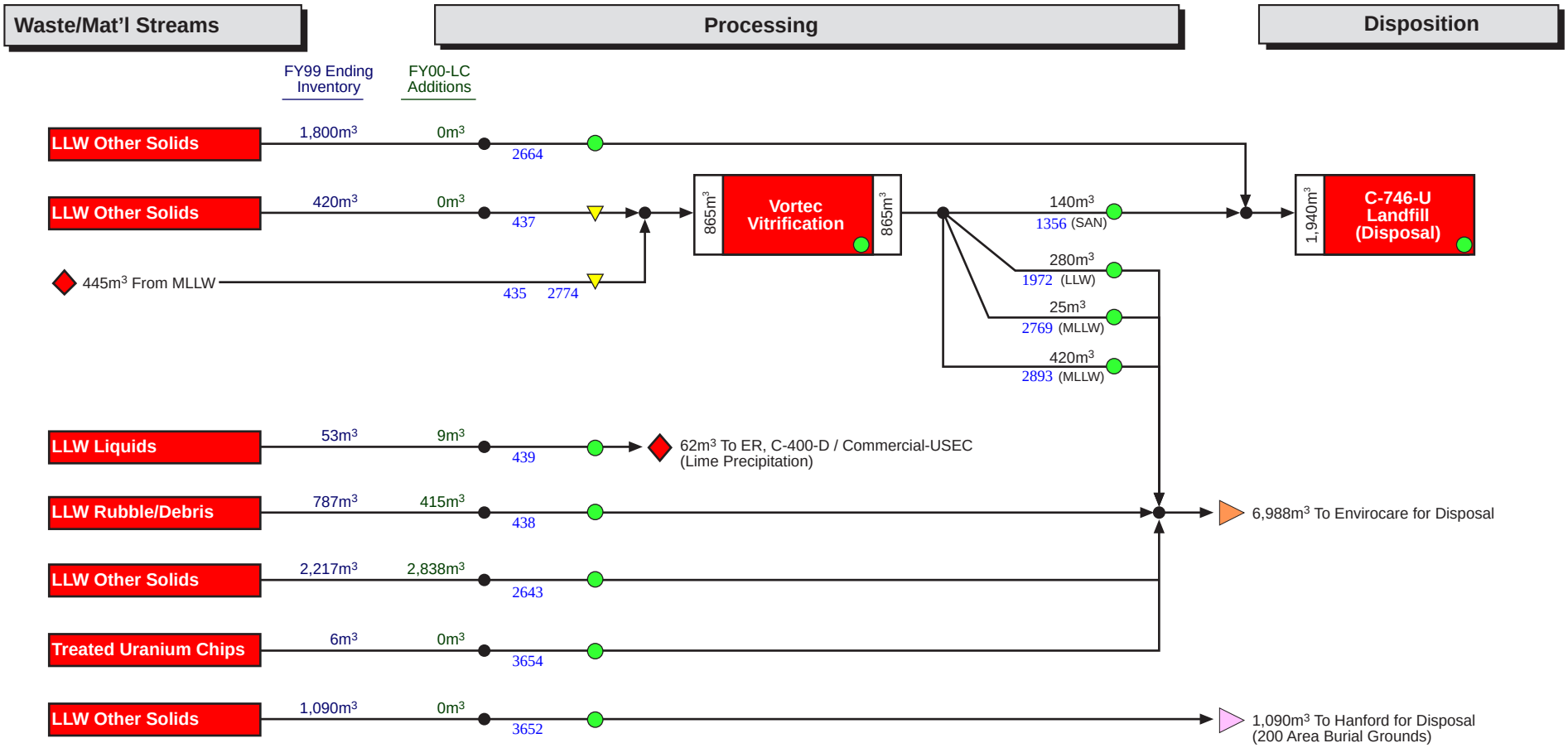


KEY: Albuquerque | Carlsbad | Chicago | Commercial | Idaho | Nevada | Oak Ridge | Oakland | Ohio | Richland | Rocky Flats | SRS | Other | Unknown | Off-site Interface: ▷ | On site Interface: ◇

Rev. 5.0
7/5/00

# Portsmouth LLW Disposition Map

**Dataset: IPAB-IS (6/26/00)**

**PREDECISIONAL DRAFT**

This map is conceptual and in many cases does not represent cleanup or transfer decisions; this map does not preclude the on-going regulatory and stakeholder decision-making processes.

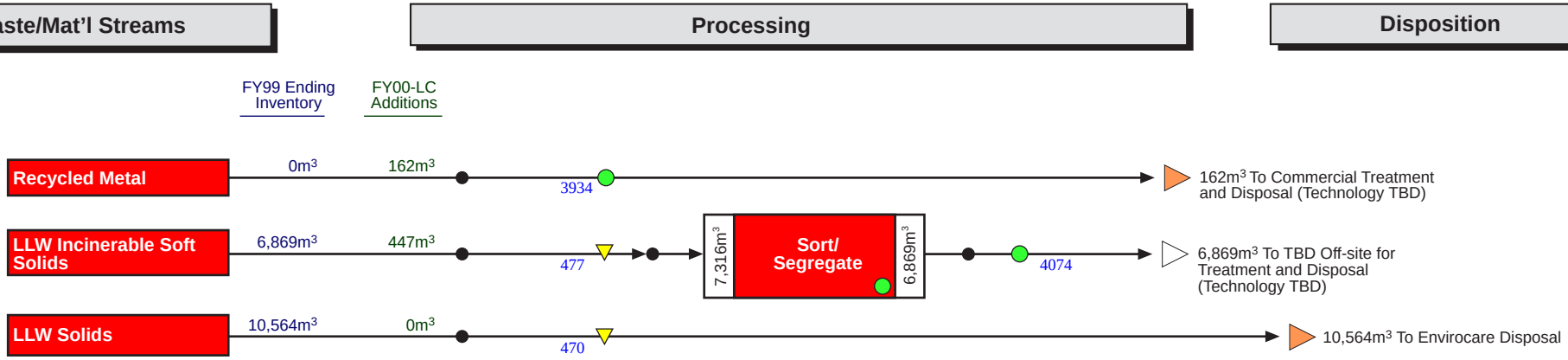


KEY: Albuquerque | Carlsbad | Chicago | Commercial | Idaho | Nevada | Oak Ridge | Oakland | Ohio | Richland | Rocky Flats | SRS | Other | Unknown | Off-site Interface: ▷ | On site Interface: ◇

Rev. 5.0
7/5/00

# General Atomics LLW Disposition Map

**Dataset: IPAB-IS (6/26/00)**

**PREDECISIONAL DRAFT**

This map is conceptual and in many cases does not represent cleanup or transfer decisions; this map does not preclude the on-going regulatory and stakeholder decision-making processes.

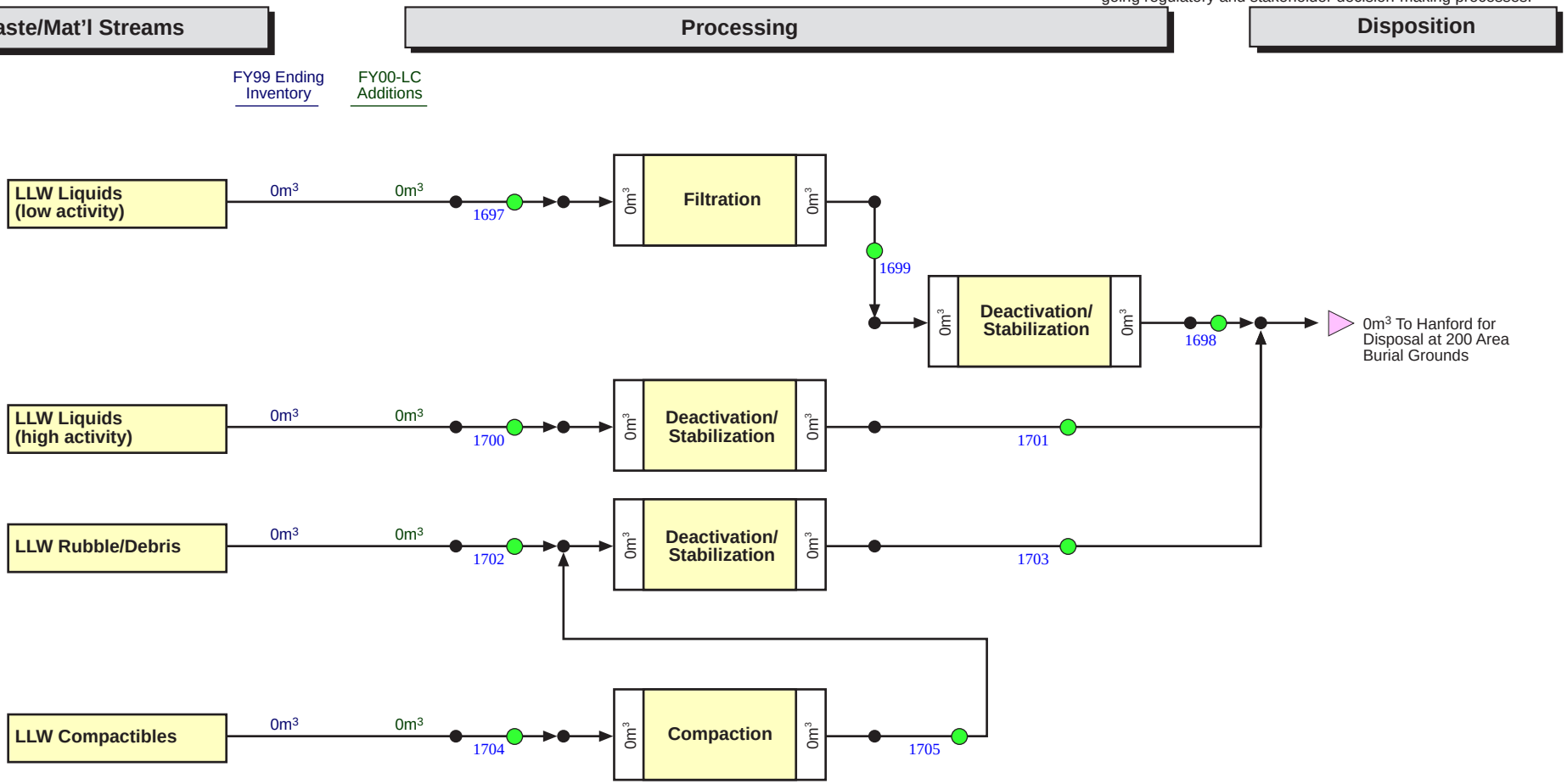


KEY: Albuquerque | Carlsbad | Chicago | Commercial | Idaho | Nevada | Oak Ridge | Oakland | Ohio | Richland | Rocky Flats | SRS | Other | Unknown | Off-site Interface: ▷ | On site Interface: ◇

Rev. 5.0
7/5/00

# LBNL LLW Disposition Map

**Dataset: IPAB-IS (6/26/00)**

**PREDECISIONAL DRAFT**
This map is conceptual and in many cases does not represent cleanup or transfer decisions; this map does not preclude the on-going regulatory and stakeholder decision-making processes.

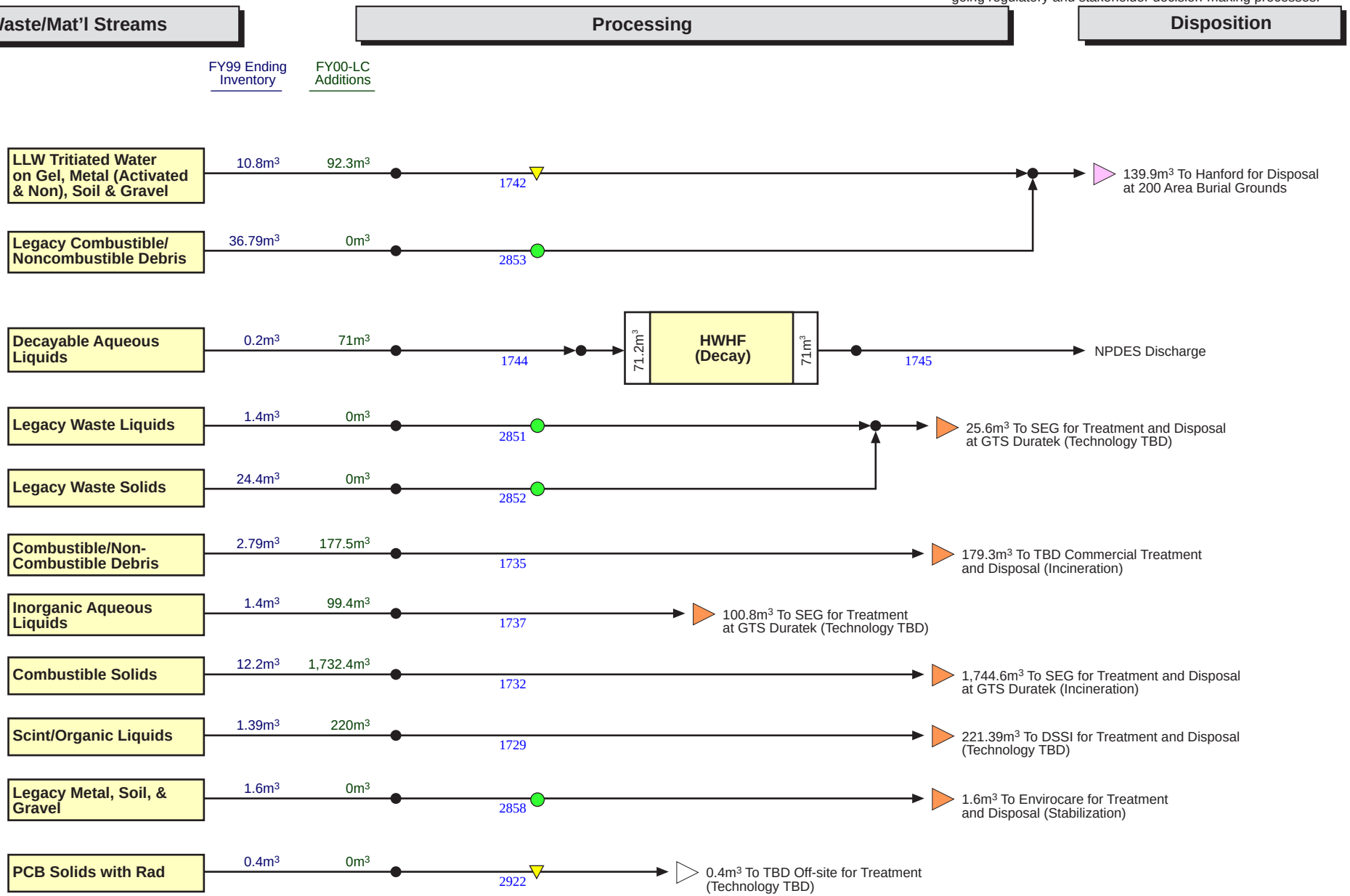


KEY: Albuquerque | Carlsbad | Chicago | Commercial | Idaho | Nevada | Oak Ridge | Oakland | Ohio | Richland | Rocky Flats | SRS | Other | Unknown | Off-site Interface: ▷ | On site Interface: ◇

Rev. 5.0
7/5/00

# LEHR LLW Disposition Map

**Dataset: IPAB-IS (6/26/00)**

**PREDECISIONAL DRAFT**

This map is conceptual and in many cases does not represent cleanup or transfer decisions; this map does not preclude the on-going regulatory and stakeholder decision-making processes.

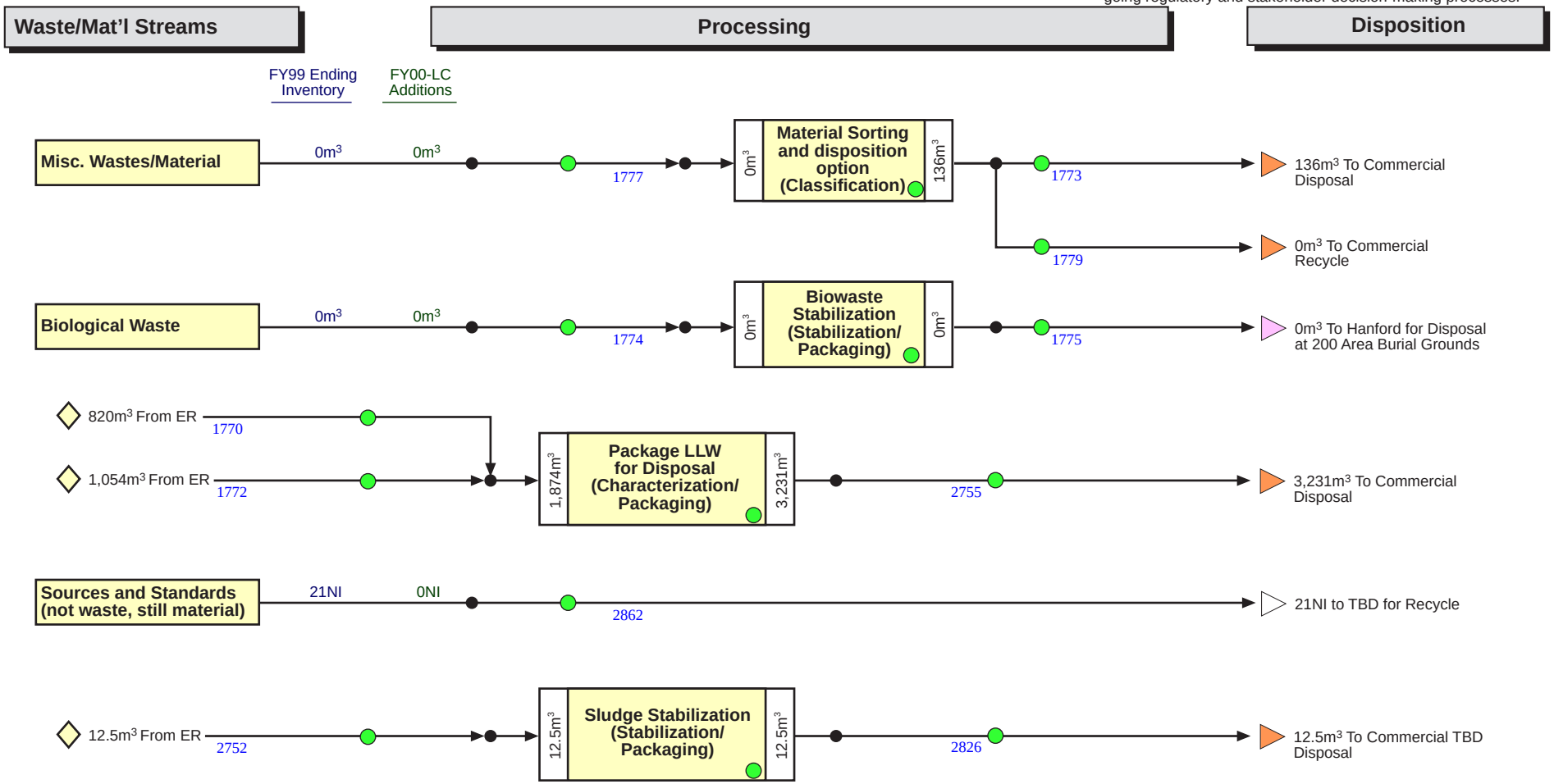


KEY: Albuquerque | Carlsbad | Chicago | Commercial | Idaho | Nevada | Oak Ridge | Oakland | Ohio | Richland | Rocky Flats | SRS | Other | Unknown | Off-site Interface: ▷ | On site Interface: ◇

Rev. 5.0
7/5/00

# LLNL LLW Disposition Map

**Dataset: IPAB-IS (6/26/00)**

**PREDECISIONAL DRAFT**

This map is conceptual and in many cases does not represent cleanup or transfer decisions; this map does not preclude the on-going regulatory and stakeholder decision-making processes.

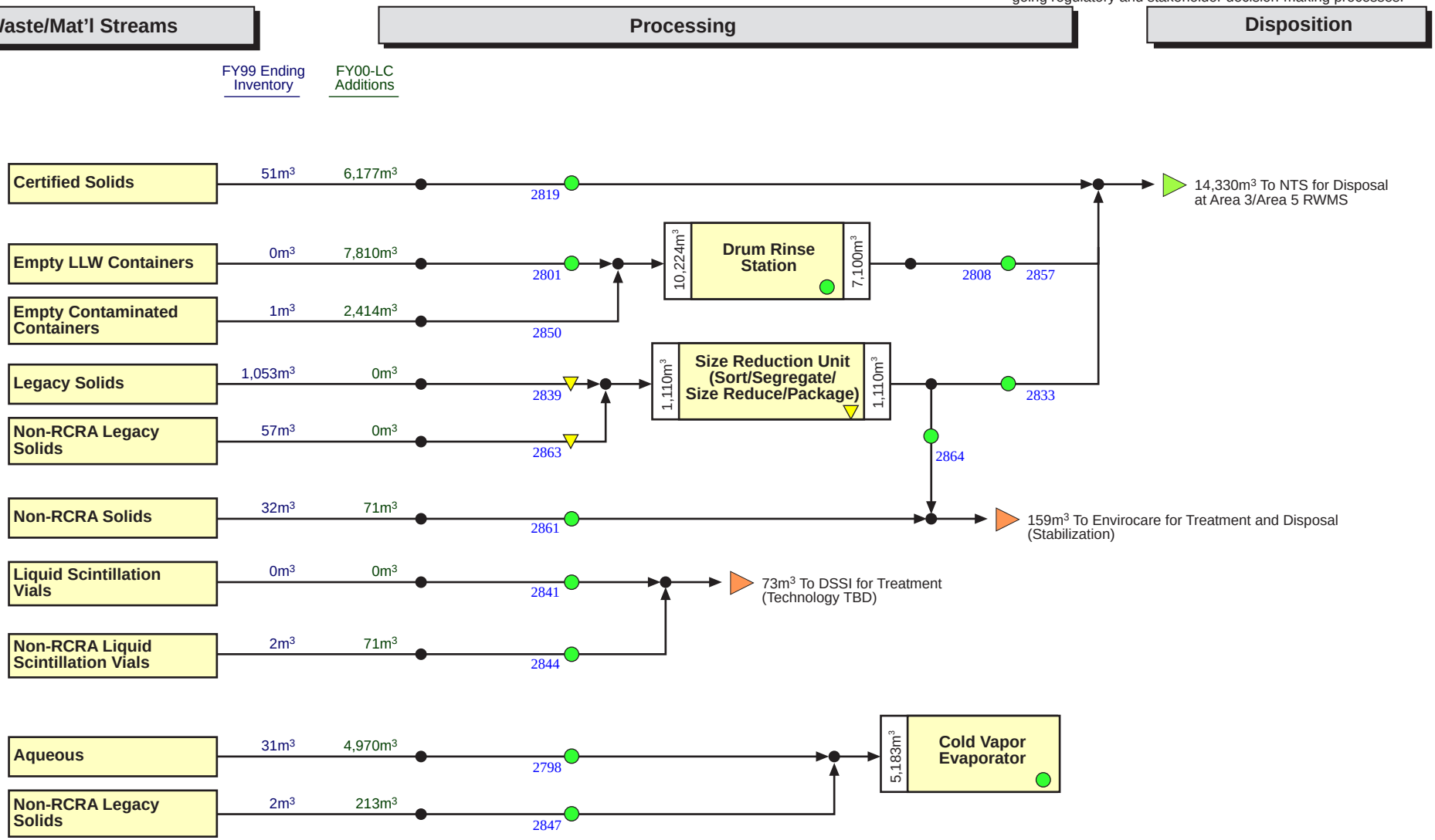


KEY: Albuquerque | Carlsbad | Chicago | Commercial | Idaho | Nevada | Oak Ridge | Oakland | Ohio | Richland | Rocky Flats | SRS | Other | Unknown | Off-site Interface: ▷ | On site Interface: ◇

Rev. 5.0
7/5/00

# Stanford Accelerator LLW Disposition Map

**Dataset: IPAB-IS (6/26/00)**

**PREDECISIONAL DRAFT**

This map is conceptual and in many cases does not represent cleanup or transfer decisions; this map does not preclude the on-going regulatory and stakeholder decision-making processes.

| Waste/Mat'l Streams | FY99 Ending Inventory | FY00-LC Additions | Processing | Disposition |
|---|---|---|---|---|
| SLAC LLW to Hanford | $0m^3$ | $789.48m^3$ | 4107 | $789.48m^3$ To Hanford for Disposal at 200 Area Burial Grounds |

KEY: Albuquerque | Carlsbad | Chicago | Commercial | Idaho | Nevada | Oak Ridge | Oakland | Ohio | Richland | Rocky Flats | SRS | Other | Unknown | Off-site Interface: ▷ | On site Interface: ◇

Rev. 5.0
7/5/00

Dataset: IPAB-IS (6/26/00)

# RMI (Ashtabula) LLW Disposition Map

**PREDECISIONAL DRAFT**

This map is conceptual and in many cases does not represent cleanup or transfer decisions; this map does not preclude the on-going regulatory and stakeholder decision-making processes.

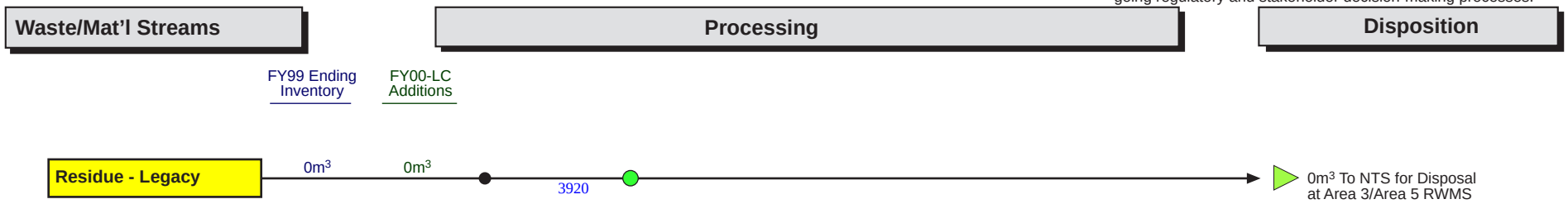


KEY: Albuquerque | Carlsbad | Chicago | Commercial | Idaho | Nevada | Oak Ridge | Oakland | Ohio | Richland | Rocky Flats | SRS | Other | Unknown | Off-site Interface: ▷ | On site Interface: ◇

Rev. 5.0
7/6/00

# West Valley LLW Disposition Map

Dataset: IPAB-IS (6/26/00)

**PREDECISIONAL DRAFT**

This map is conceptual and in many cases does not represent cleanup or transfer decisions; this map does not preclude the on-going regulatory and stakeholder decision-making processes.

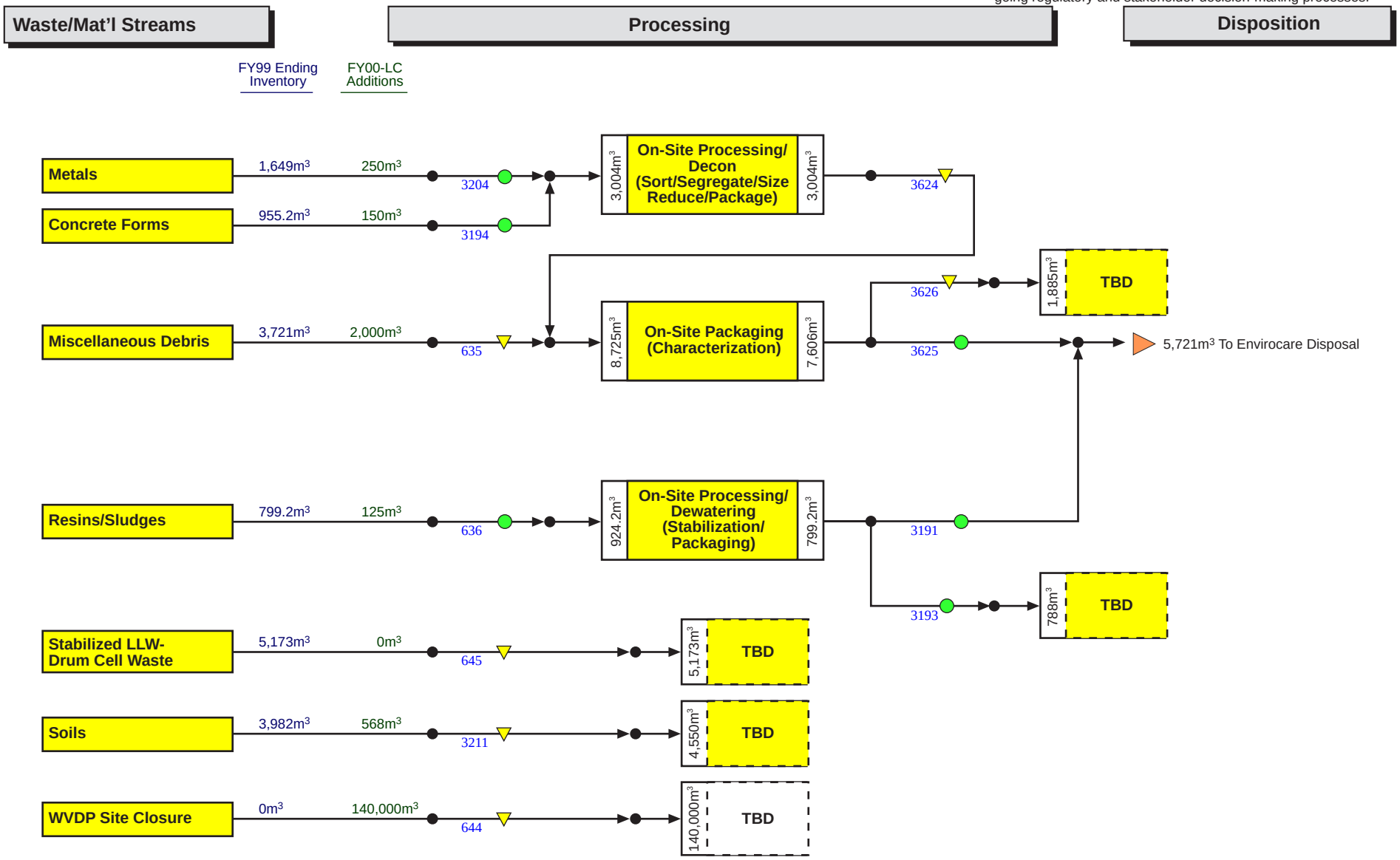


KEY: Albuquerque | Carlsbad | Chicago | Commercial | Idaho | Nevada | Oak Ridge | Oakland | Ohio | Richland | Rocky Flats | SRS | Other | Unknown | Off-site Interface: ▷ | On site Interface: ◇

Rev. 5.0
7/6/00

# Hanford LLW Disposition Map

**Dataset: IPAB-IS (6/26/00)**

**PREDECISIONAL DRAFT**

This map is conceptual and in many cases does not represent cleanup or transfer decisions; this map does not preclude the on-going regulatory and stakeholder decision-making processes.

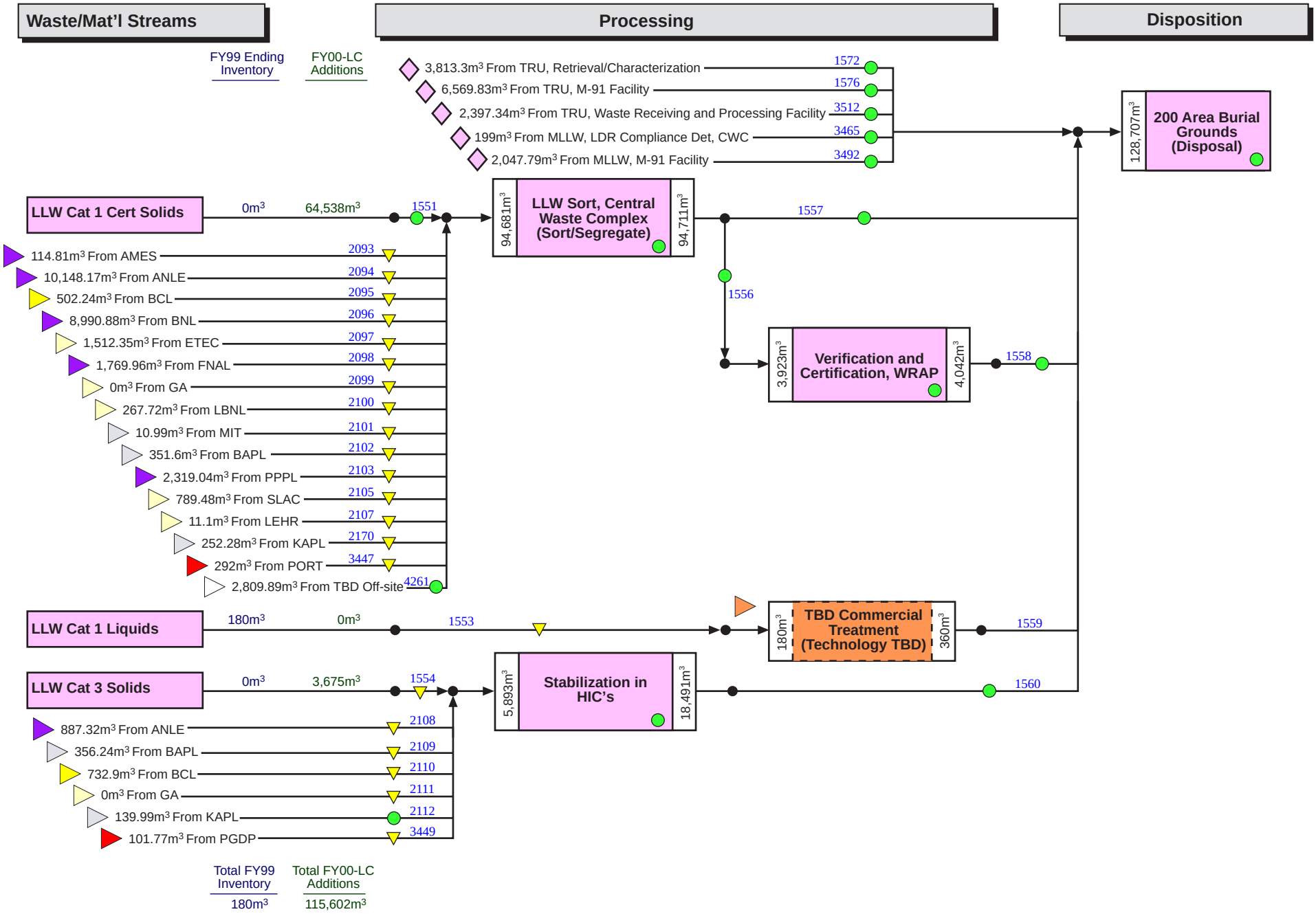


KEY: Albuquerque | Carlsbad | Chicago | Commercial | Idaho | Nevada | Oak Ridge | Oakland | Ohio | Richland | Rocky Flats | SRS | Other | Unknown | Off-site Interface: ▷ | On site Interface: ◇

Rev. 5.0
7/6/00

# Rocky Flats LLW Disposition Map

**Dataset: IPAB-IS (6/26/00)**

**PREDECISIONAL DRAFT**

This map is conceptual and in many cases does not represent cleanup or transfer decisions; this map does not preclude the on-going regulatory and stakeholder decision-making processes.

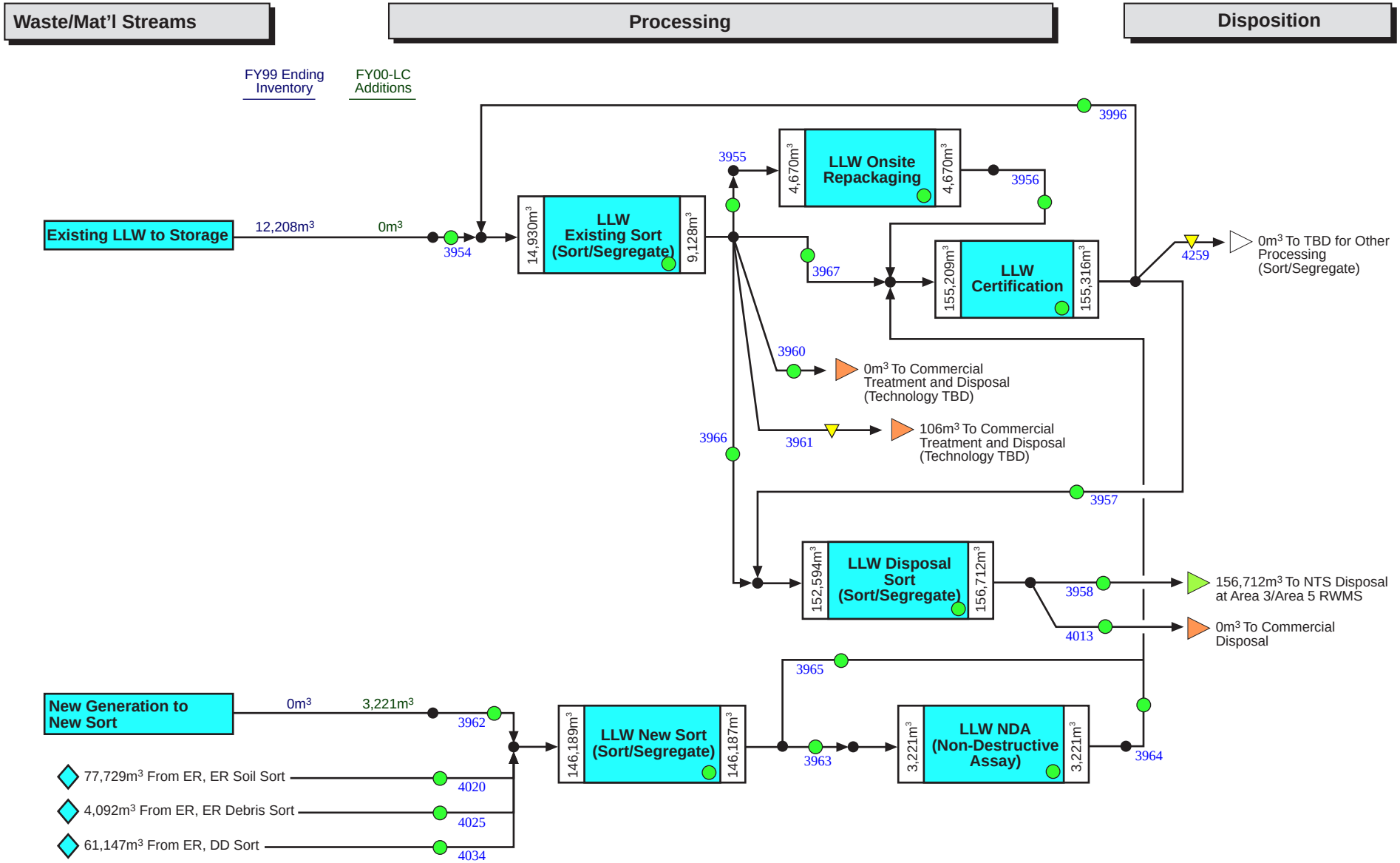


KEY: Albuquerque | Carlsbad | Chicago | Commercial | Idaho | Nevada | Oak Ridge | Oakland | Ohio | Richland | Rocky Flats | SRS | Other | Unknown | Off-site Interface: ▷ | On site Interface: ◇

Rev. 5.0
7/6/00

# SRS LLW Disposition Map

**Dataset: IPAB-IS (6/26/00)**

**PREDECISIONAL DRAFT**

This map is conceptual and in many cases does not represent cleanup or transfer decisions; this map does not preclude the on-going regulatory and stakeholder decision-making processes.

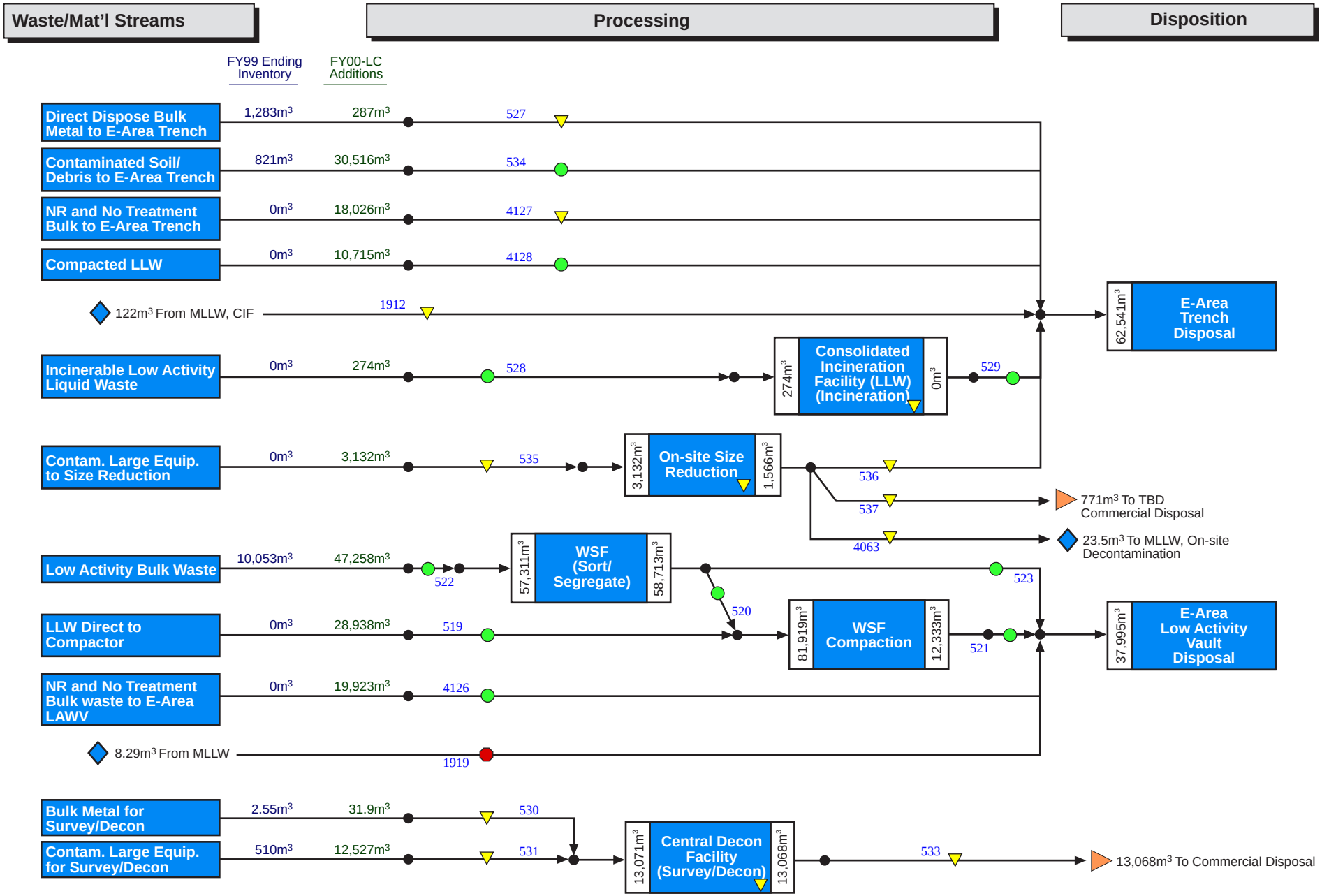


KEY: Albuquerque | Carlsbad | Chicago | Commercial | Idaho | Nevada | Oak Ridge | Oakland | Ohio | Richland | Rocky Flats | SRS | Other | Unknown | Off-site Interface: ▷ | On site Interface: ◇

Rev. 5.0
7/6/00

# SRS LLW Disposition Map

**Dataset: IPAB-IS (6/26/00)**

**PREDECISIONAL DRAFT**
This map is conceptual and in many cases does not represent cleanup or transfer decisions; this map does not preclude the on-going regulatory and stakeholder decision-making processes.

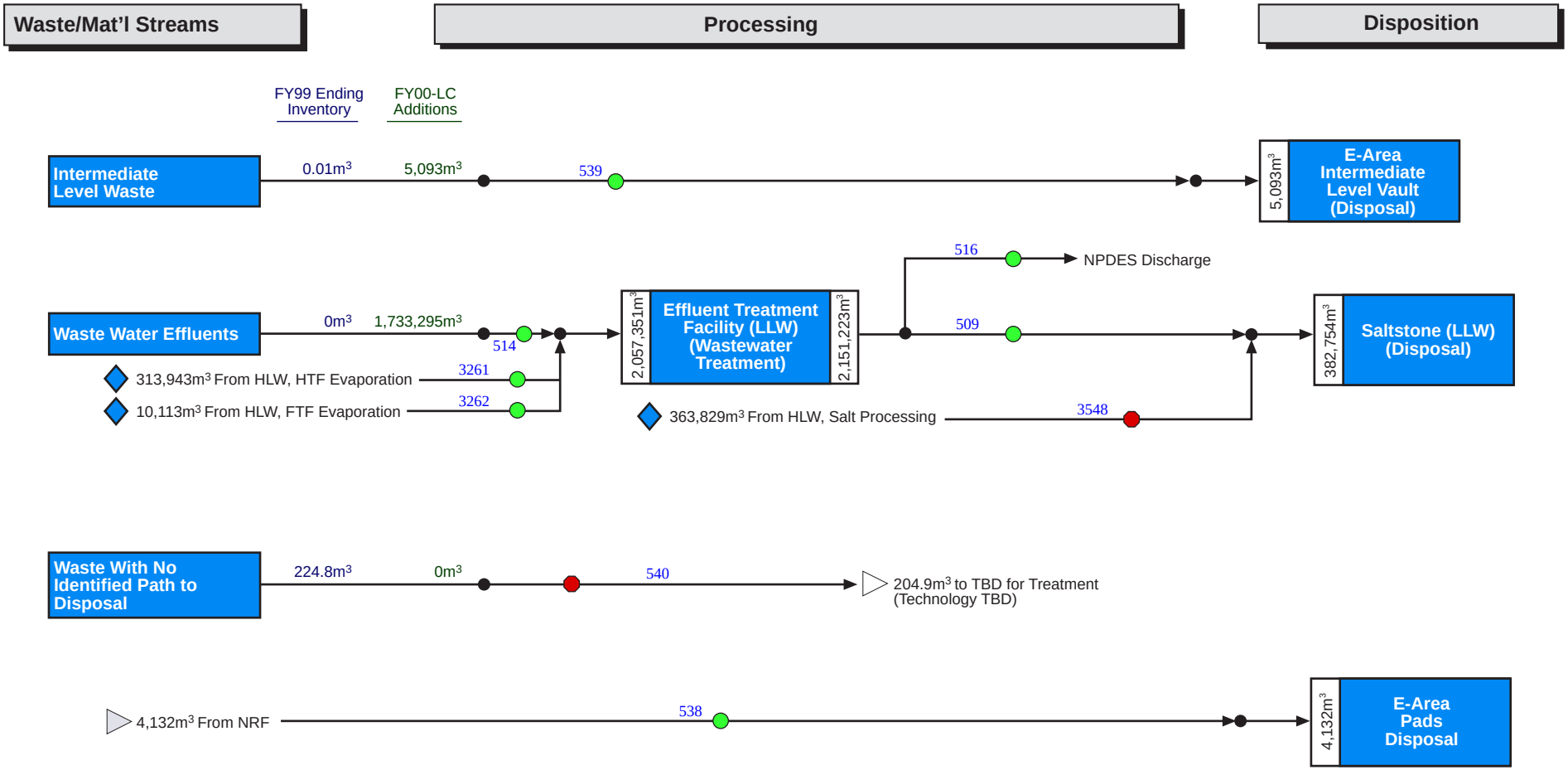


KEY: Albuquerque | Carlsbad | Chicago | Commercial | Idaho | Nevada | Oak Ridge | Oakland | Ohio | Richland | Rocky Flats | SRS | Other | Unknown | Off-site Interface: ▷ | On site Interface: ◇

Rev. 5.0
7/6/00