Grand Junction ER Disposition Map

Dataset: IPAB-IS (6/26/00)

PREDECISIONAL DRAFT

This map is conceptual and in many cases does not represent cleanup or transfer decisions; this map does not preclude the on-going regulatory and stakeholder decision-making processes.

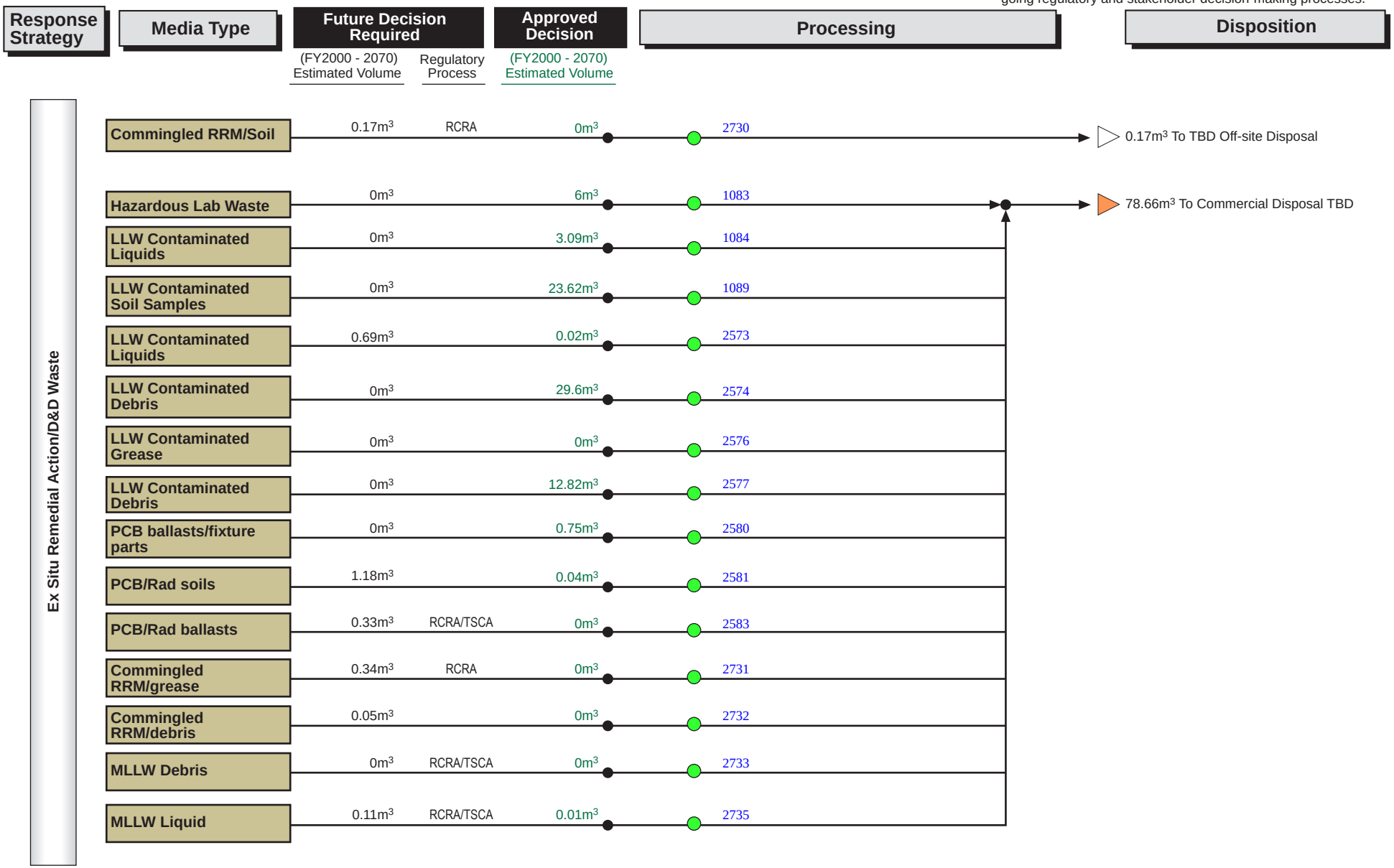

KEY: Albuquerque | Carlsbad | Chicago | Commercial | Idaho | Nevada | Oak Ridge | Oakland | Ohio | Richland | Rocky Flats | SRS | Other | Unknown | Off-site Interface: ▷ | On site Interface: ◇

Rev. 5.0
6/30/00

Grand Junction ER Disposition Map

Dataset: IPAB-IS (6/26/00)

PREDECISIONAL DRAFT

This map is conceptual and in many cases does not represent cleanup or transfer decisions; this map does not preclude the on-going regulatory and stakeholder decision-making processes.

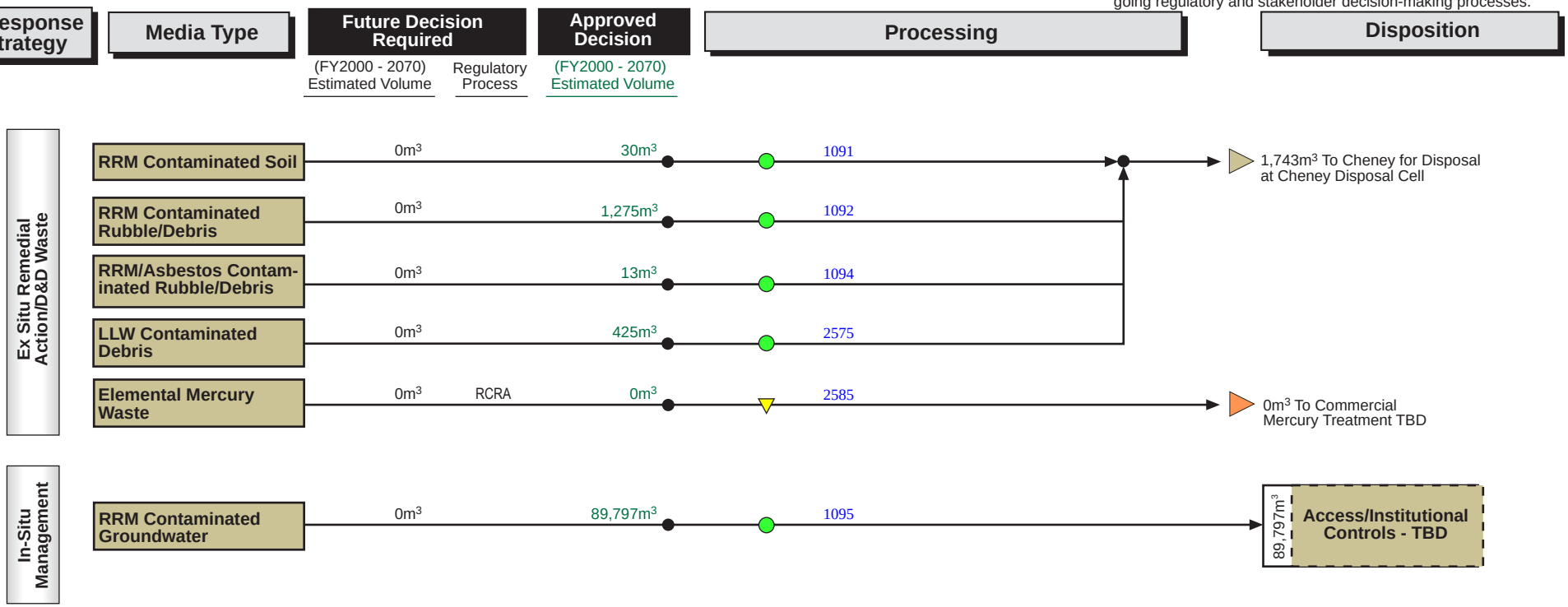

	Future Decision	Approved
Groundwater/Surfacewater:	0m^3	89,797m^3
In-Situ Response Strategy:	0m^3	0m^3
Ex Situ Response Strategy:	3m^3	1,819m^3

KEY: Albuquerque | Carlsbad | Chicago | Commercial | Idaho | Nevada | Oak Ridge | Oakland | Ohio | Richland | Rocky Flats | SRS | Other | Unknown | Off-site Interface: ▷ | On site Interface: ◇

Rev. 5.0
6/30/00

ITRI HAZ Disposition Map

Dataset: IPAB-IS (6/26/00)

PREDECISIONAL DRAFT

This map is conceptual and in many cases does not represent cleanup or transfer decisions; this map does not preclude the on-going regulatory and stakeholder decision-making processes.

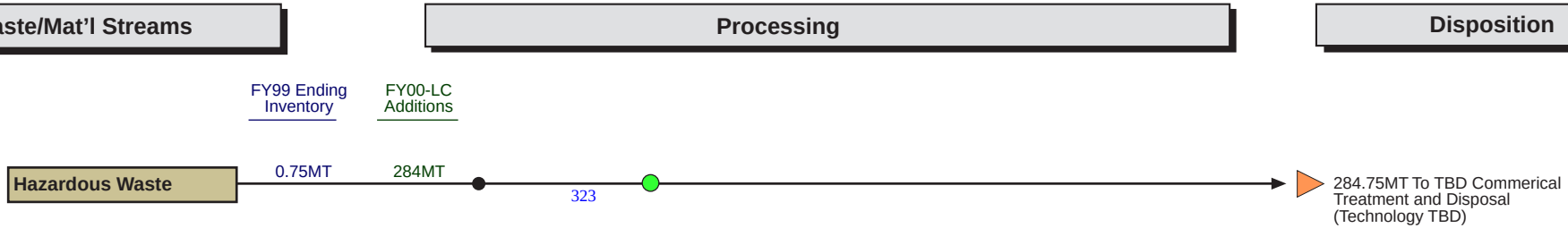

KEY: Albuquerque | Carlsbad | Chicago | Commercial | Idaho | Nevada | Oak Ridge | Oakland | Ohio | Richland | Rocky Flats | SRS | Other | Unknown | Off-site Interface: ▷ | On site Interface: ◇

Rev. 5.0
6/30/00

ITRI LLW Disposition Map

Dataset: IPAB-IS (6/26/00)

PREDECISIONAL DRAFT

This map is conceptual and in many cases does not represent cleanup or transfer decisions; this map does not preclude the on-going regulatory and stakeholder decision-making processes.

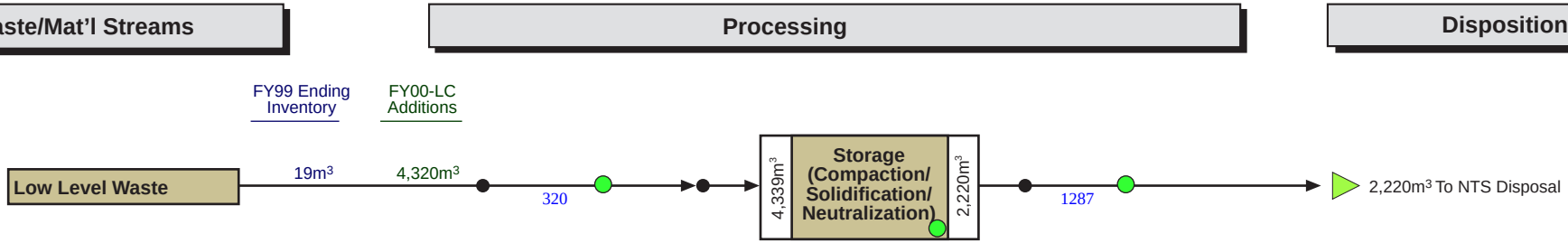

KEY: Albuquerque | Carlsbad | Chicago | Commercial | Idaho | Nevada | Oak Ridge | Oakland | Ohio | Richland | Rocky Flats | SRS | Other | Unknown | Off-site Interface: ▷ | On site Interface: ◇

Rev. 5.0
6/30/00

ITRI MLLW Disposition Map

Dataset: IPAB-IS (6/26/00)

PREDECISIONAL DRAFT

This map is conceptual and in many cases does not represent cleanup or transfer decisions; this map does not preclude the on-going regulatory and stakeholder decision-making processes.

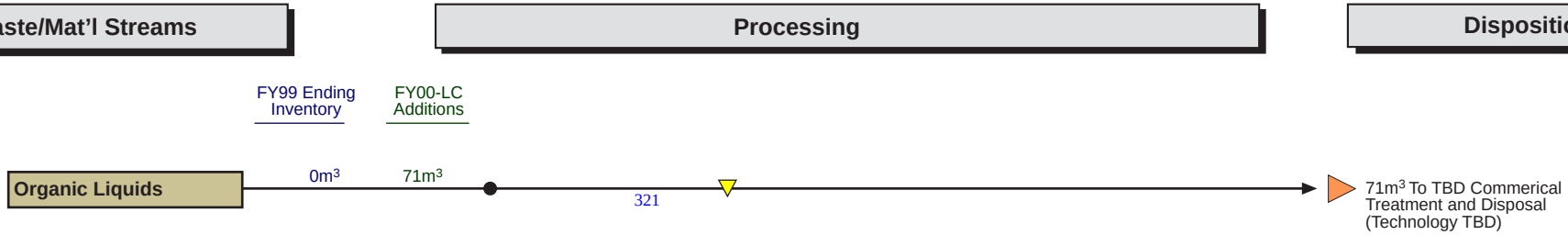

KEY: Albuquerque | Carlsbad | Chicago | Commercial | Idaho | Nevada | Oak Ridge | Oakland | Ohio | Richland | Rocky Flats | SRS | Other | Unknown | Off-site Interface: ▷ | On site Interface: ◇

Rev. 5.0
6/30/00

ITRI TRU Disposition Map

Dataset: IPAB-IS (6/26/00)

PREDECISIONAL DRAFT

This map is conceptual and in many cases does not represent cleanup or transfer decisions; this map does not preclude the on-going regulatory and stakeholder decision-making processes.

Waste/Mat'l Streams	Processing	Disposition

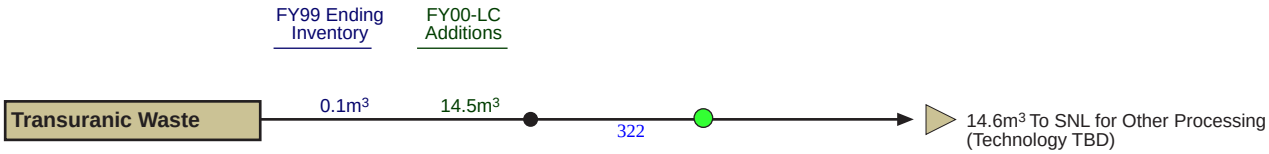

KEY: Albuquerque | Carlsbad | Chicago | Commercial | Idaho | Nevada | Oak Ridge | Oakland | Ohio | Richland | Rocky Flats | SRS | Other | Unknown | Off-site Interface: ▷ | On site Interface: ◇

Rev. 5.0
6/30/00

Kansas City ER Disposition Map

Dataset: IPAB-IS (6/26/00)

PREDECISIONAL DRAFT

This map is conceptual and in many cases does not represent cleanup or transfer decisions; this map does not preclude the on-going regulatory and stakeholder decision-making processes.

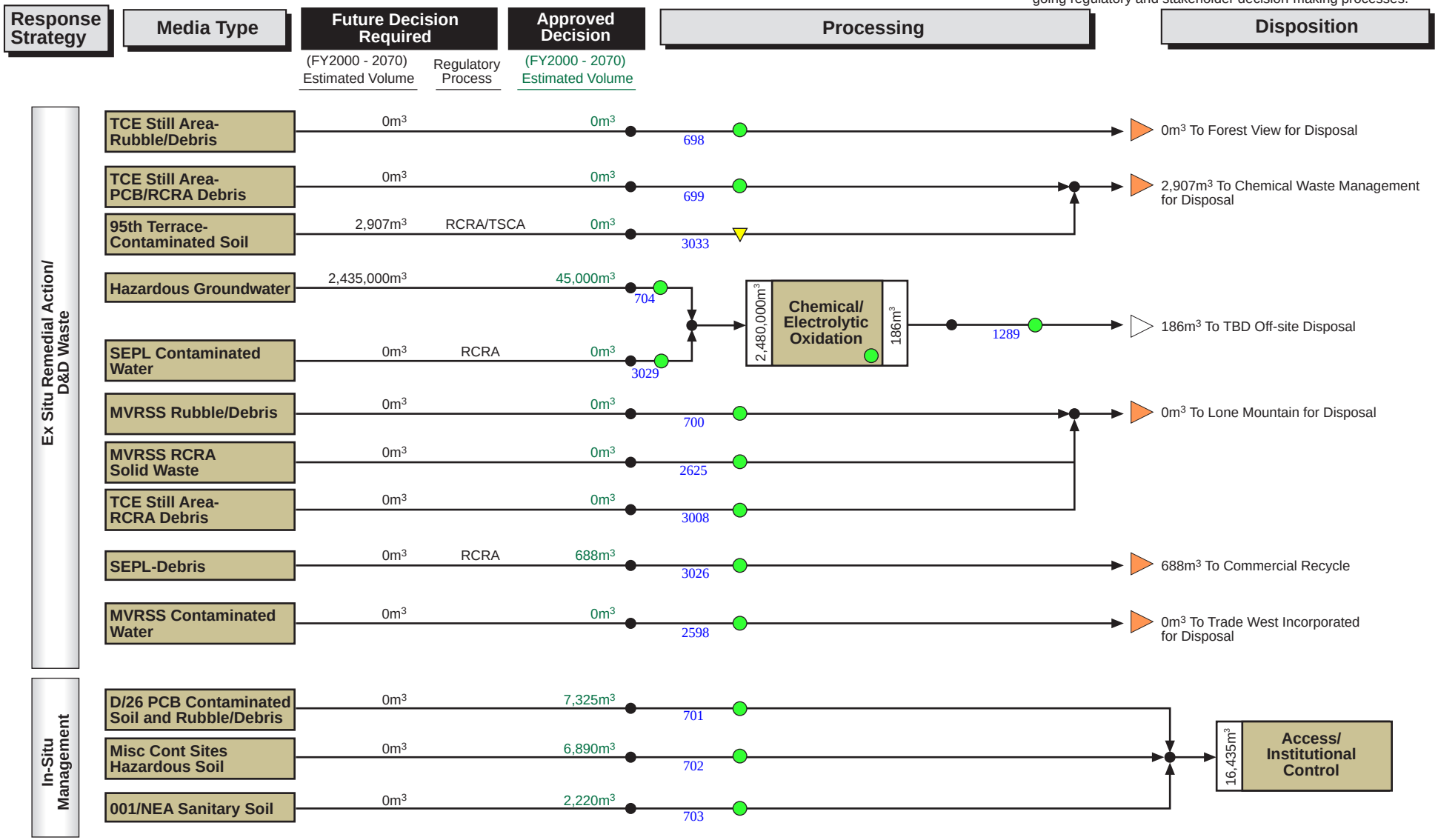

	Future Decision	Approved
Groundwater/Surfacewater:	2,435,000m^3	45,000m^3
In-Situ Response Strategy:	0m^3	16,435m^3
Ex Situ Response Strategy:	2,219m^3	688m^3

KEY: Albuquerque | Carlsbad | Chicago | Commercial | Idaho | Nevada | Oak Ridge | Oakland | Ohio | Richland | Rocky Flats | SRS | Other | Unknown | Off-site Interface: ▷ | On site Interface: ◇

Rev. 5.0
6/30/00

Kansas City LLW Disposition Map

Dataset: IPAB-IS (6/26/00)

PREDECISIONAL DRAFT

This map is conceptual and in many cases does not represent cleanup or transfer decisions; this map does not preclude the on-going regulatory and stakeholder decision-making processes.

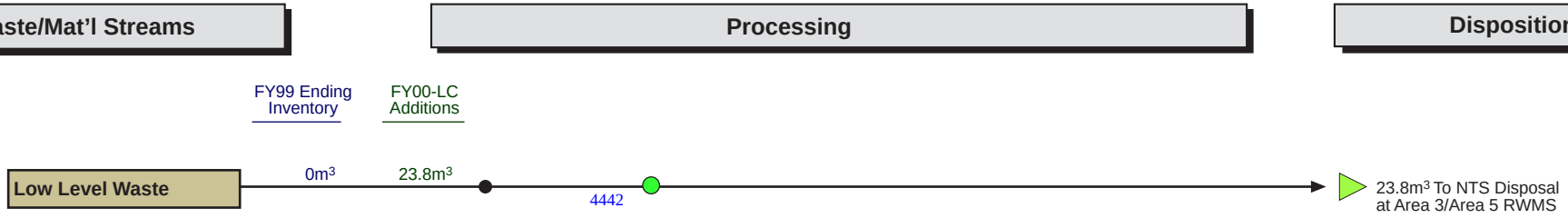

KEY: Albuquerque | Carlsbad | Chicago | Commercial | Idaho | Nevada | Oak Ridge | Oakland | Ohio | Richland | Rocky Flats | SRS | Other | Unknown | Off-site Interface: ▷ | On site Interface: ◇

Rev. 5.0
6/30/00

LANL ER Disposition Map

Dataset: IPAB-IS (6/26/00)

PREDECISIONAL DRAFT

This map is conceptual and in many cases does not represent cleanup or transfer decisions; this map does not preclude the on-going regulatory and stakeholder decision-making processes.

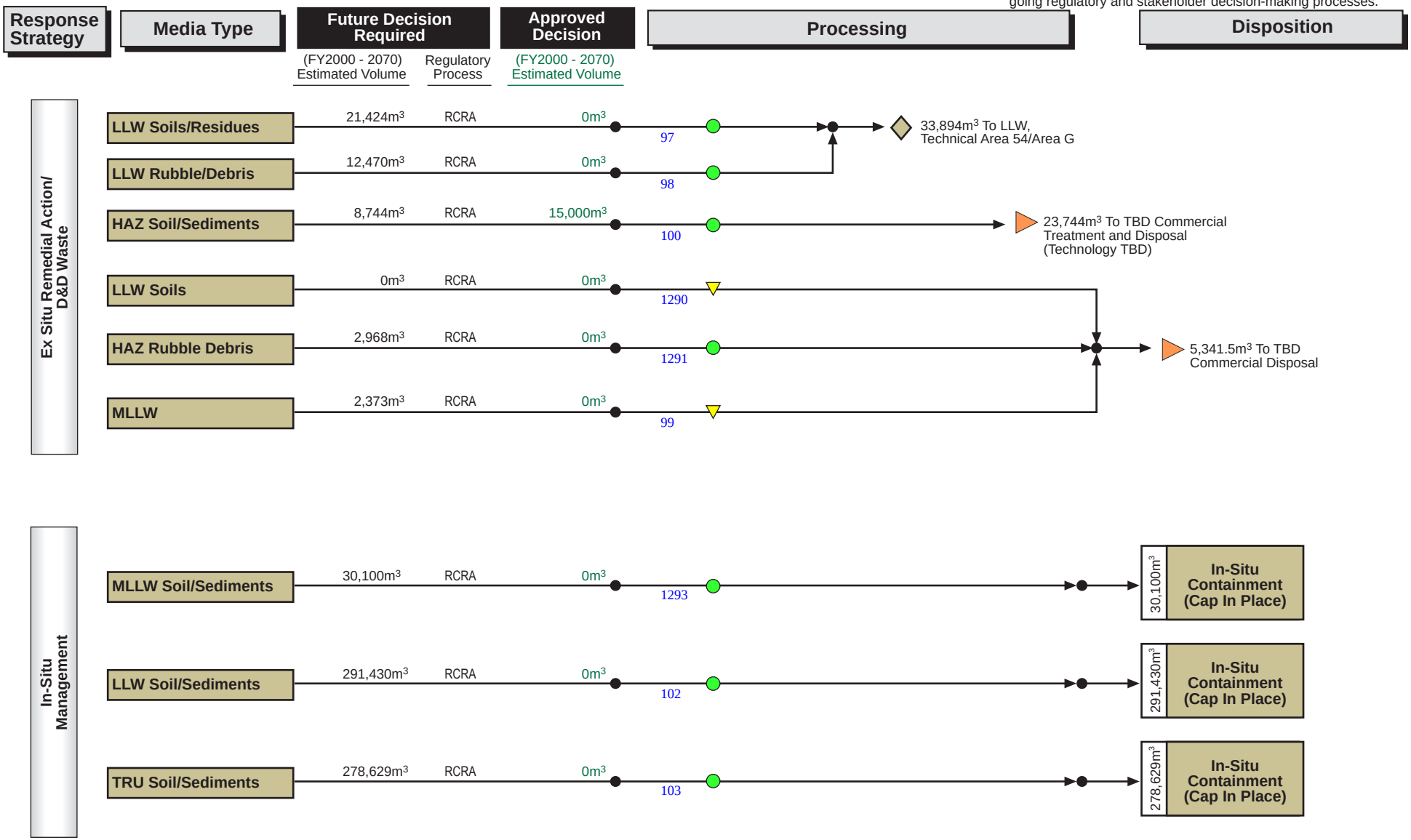

	Future Decision	Approved
Groundwater/Surfacewater:	0m³	0m³
In-Situ Response Strategy:	600,159m³	0m³
Ex Situ Response Strategy:	47,979m³	15,000m³

KEY: Albuquerque | Carlsbad | Chicago | Commercial | Idaho | Nevada | Oak Ridge | Oakland | Ohio | Richland | Rocky Flats | SRS | Other | Unknown | Off-site Interface: ▷ | On site Interface: ◇

Rev. 5.0
6/30/00

LANL LLW Disposition Map

Dataset: IPAB-IS (6/26/00)

PREDECISIONAL DRAFT

This map is conceptual and in many cases does not represent cleanup or transfer decisions; this map does not preclude the on-going regulatory and stakeholder decision-making processes.

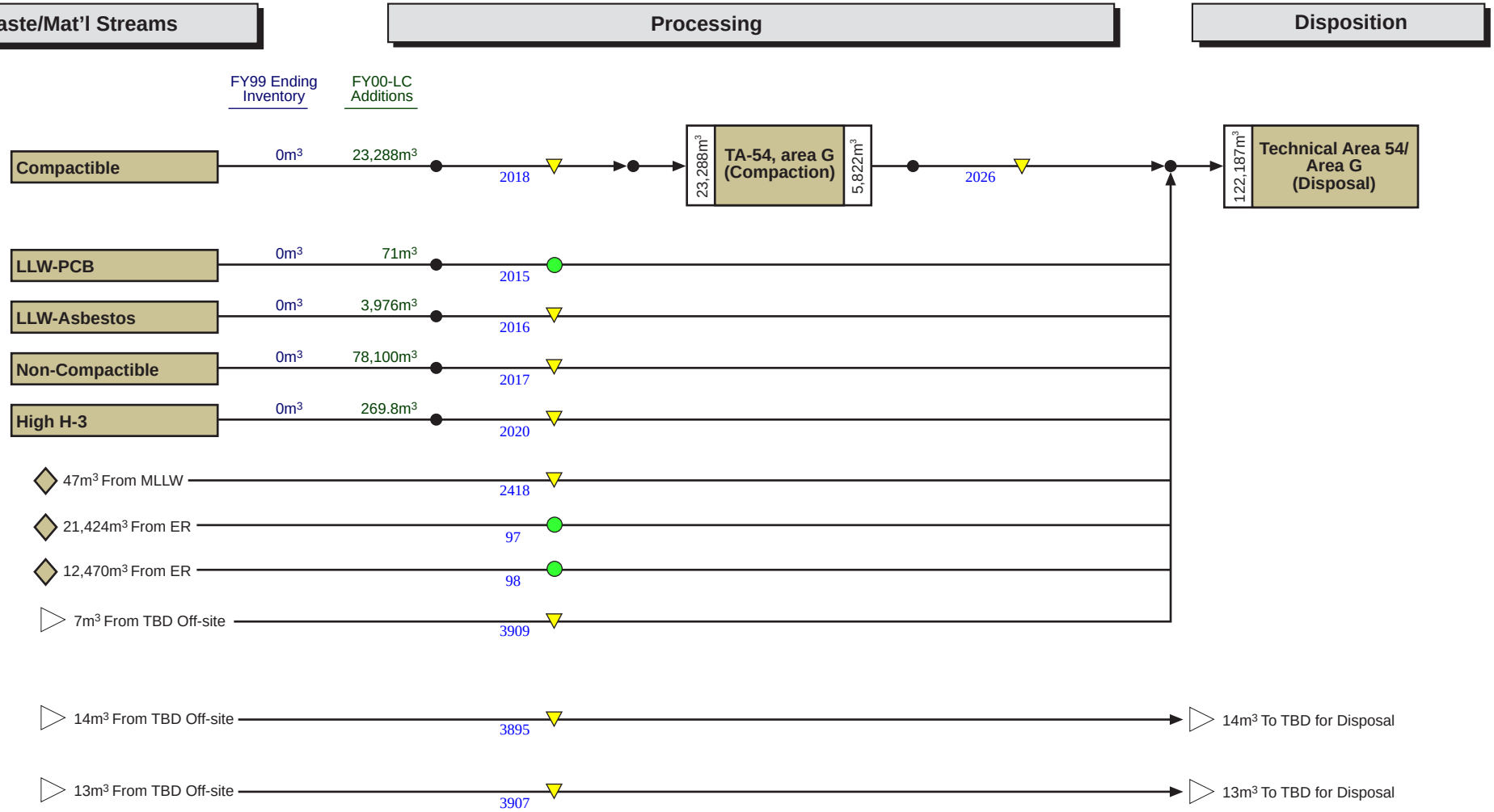

KEY: Albuquerque | Carlsbad | Chicago | Commercial | Idaho | Nevada | Oak Ridge | Oakland | Ohio | Richland | Rocky Flats | SRS | Other | Unknown | Off-site Interface: ▷ | On site Interface: ◇

Rev. 5.0
6/30/00

LANL MLLW Disposition Map

Dataset: IPAB-IS (6/26/00)

PREDECISIONAL DRAFT

This map is conceptual and in many cases does not represent cleanup or transfer decisions; this map does not preclude the on-going regulatory and stakeholder decision-making processes.

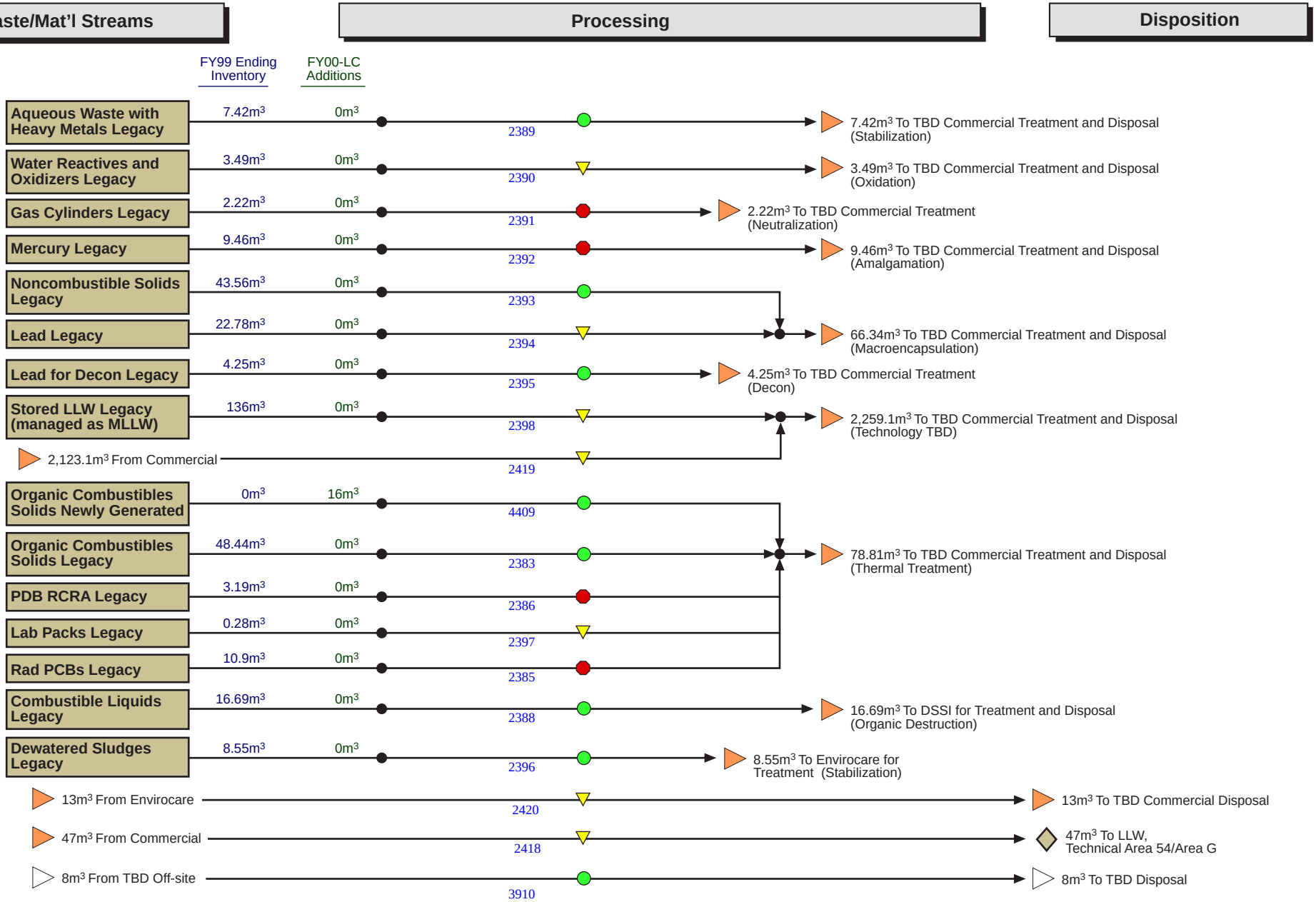

KEY: Albuquerque | Carlsbad | Chicago | Commercial | Idaho | Nevada | Oak Ridge | Oakland | Ohio | Richland | Rocky Flats | SRS | Other | Unknown | Off-site Interface: ▷ | On site Interface: ◇

Rev. 5.0
6/30/00

LANL TRU Disposition Map

Dataset: IPAB-IS (6/26/00)

PREDECISIONAL DRAFT

This map is conceptual and in many cases does not represent cleanup or transfer decisions; this map does not preclude the on-going regulatory and stakeholder decision-making processes.

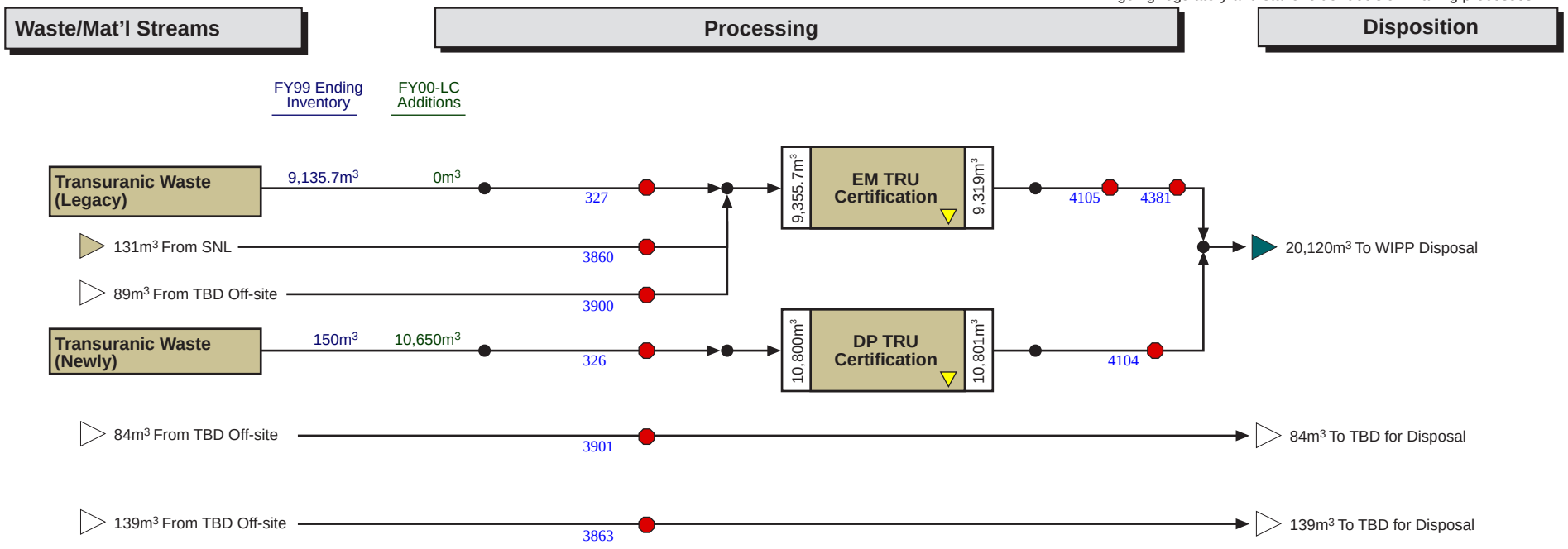

KEY: Albuquerque | Carlsbad | Chicago | Commercial | Idaho | Nevada | Oak Ridge | Oakland | Ohio | Richland | Rocky Flats | SRS | Other | Unknown | Off-site Interface: ▷ | On site Interface: ◇

Rev. 5.0
6/30/00

Monticello ER Disposition Map

Dataset: IPAB-IS (6/26/00)

PREDECISIONAL DRAFT

This map is conceptual and in many cases does not represent cleanup or transfer decisions; this map does not preclude the on-going regulatory and stakeholder decision-making processes.

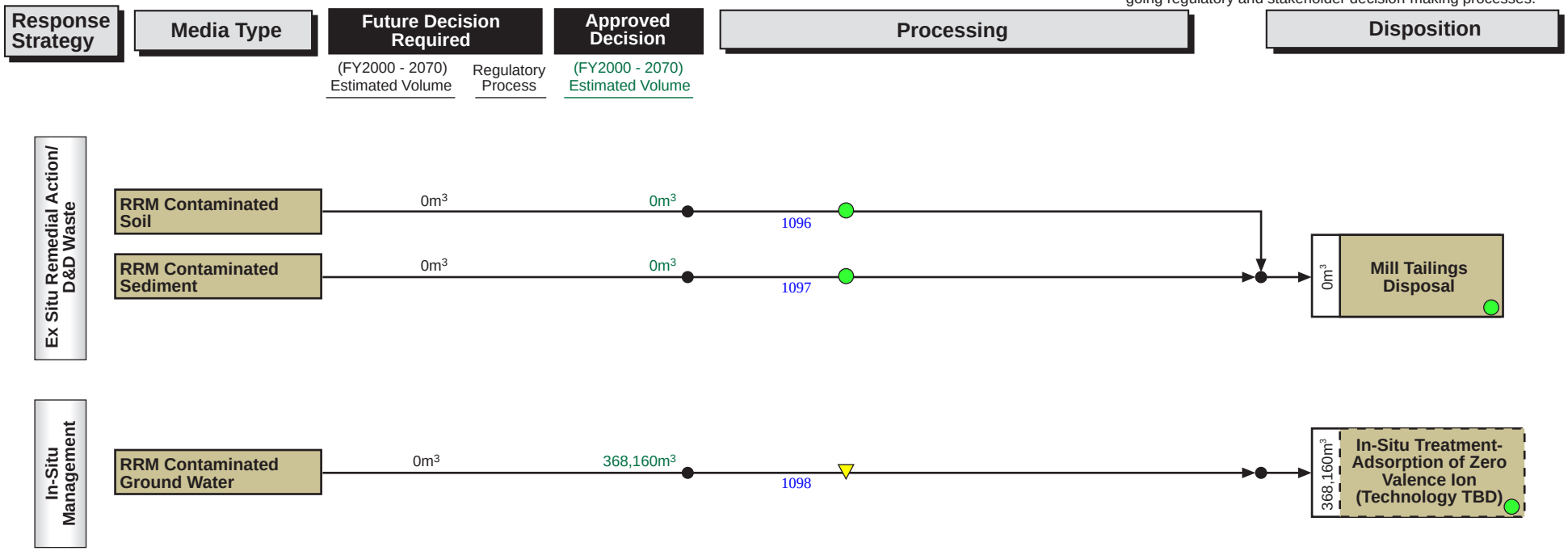

	Future Decision	Approved
Groundwater/Surfacewater:	0m³	368,160m³
In-Situ Response Strategy:	0m³	0m³
Ex Situ Response Strategy:	0m³	0m³

KEY: Albuquerque | Carlsbad | Chicago | Commercial | Idaho | Nevada | Oak Ridge | Oakland | Ohio | Richland | Rocky Flats | SRS | Other | Unknown | Off-site Interface: ▷ | On site Interface: ◇

Rev. 5.0
6/30/00

Pinellas ER Disposition Map

Dataset: IPAB-IS (6/26/00)

PREDECISIONAL DRAFT

This map is conceptual and in many cases does not represent cleanup or transfer decisions; this map does not preclude the on-going regulatory and stakeholder decision-making processes.

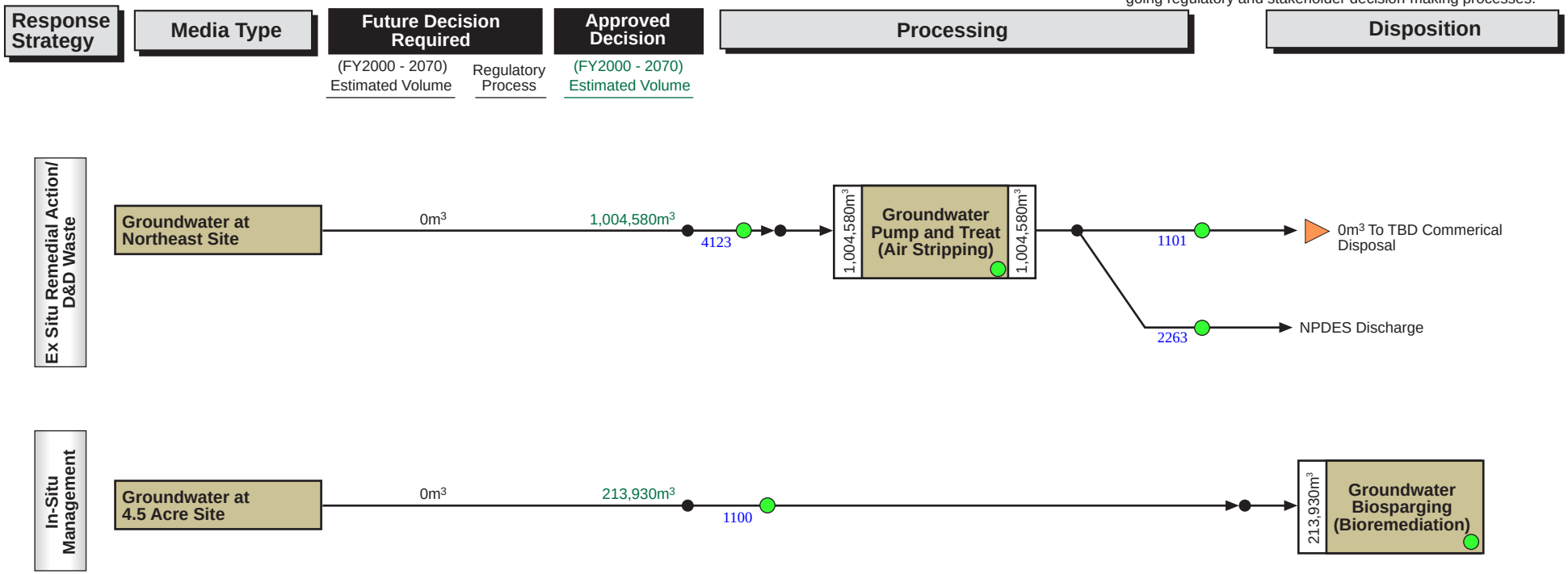

	Future Decision	Approved
Groundwater/Surfacewater:	0m³	1,218,510m³
In-Situ Response Strategy:	0m³	0m³
Ex Situ Response Strategy:	0m³	0m³

KEY: Albuquerque | Carlsbad | Chicago | Commercial | Idaho | Nevada | Oak Ridge | Oakland | Ohio | Richland | Rocky Flats | SRS | Other | Unknown | Off-site Interface: ▷ | On site Interface: ◇

Rev. 5.0
6/30/00

Pantex ER Disposition Map

Dataset: IPAB-IS (6/26/00)

PREDECISIONAL DRAFT

This map is conceptual and in many cases does not represent cleanup or transfer decisions; this map does not preclude the on-going regulatory and stakeholder decision-making processes.

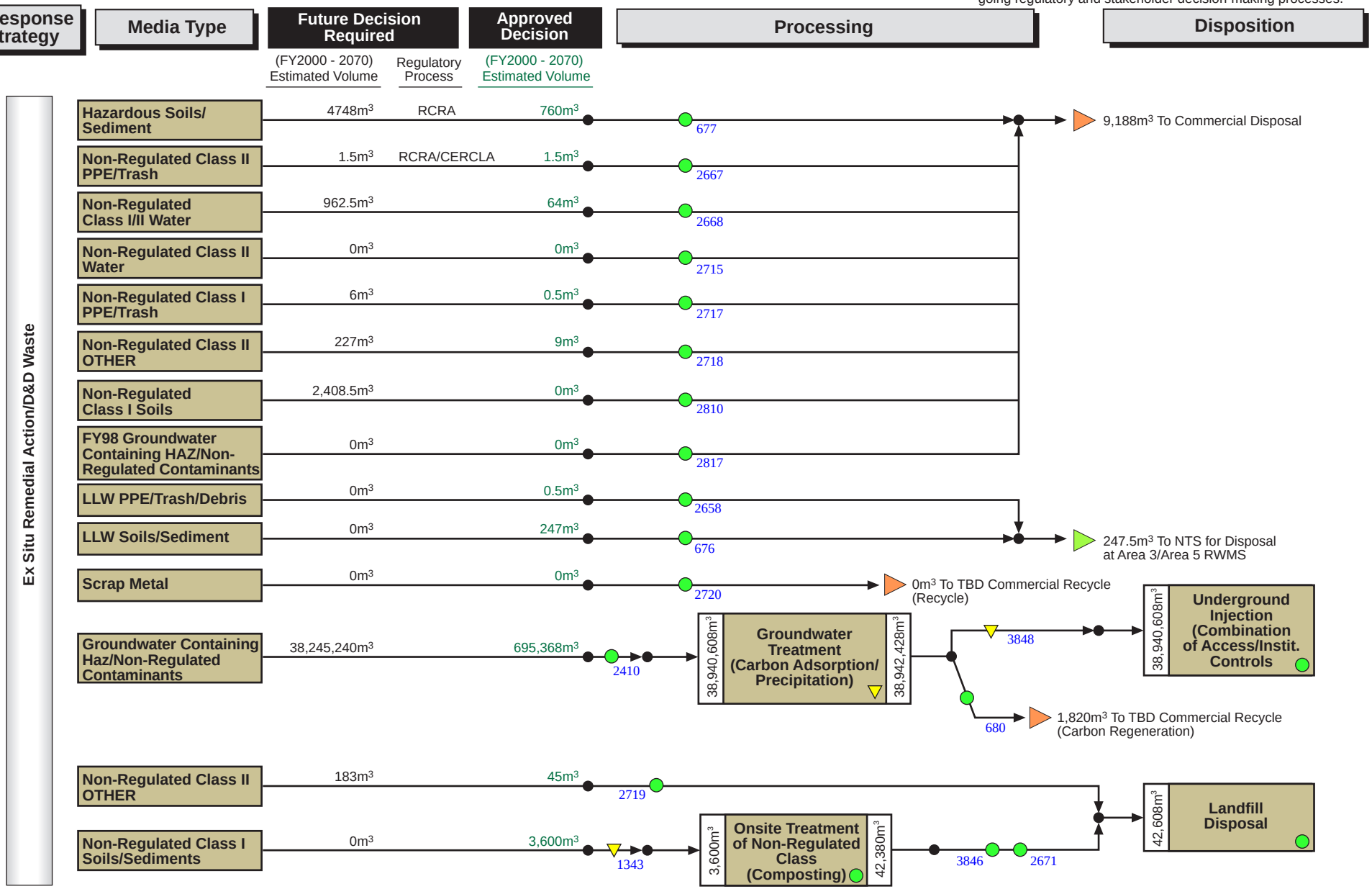

KEY: Albuquerque | Carlsbad | Chicago | Commercial | Idaho | Nevada | Oak Ridge | Oakland | Ohio | Richland | Rocky Flats | SRS | Other | Unknown | Off-site Interface: ▷ | On site Interface: ◇

Rev. 5.0
6/30/00

Pantex ER Disposition Map

Dataset: IPAB-IS (6/26/00)

PREDECISIONAL DRAFT

This map is conceptual and in many cases does not represent cleanup or transfer decisions; this map does not preclude the on-going regulatory and stakeholder decision-making processes.

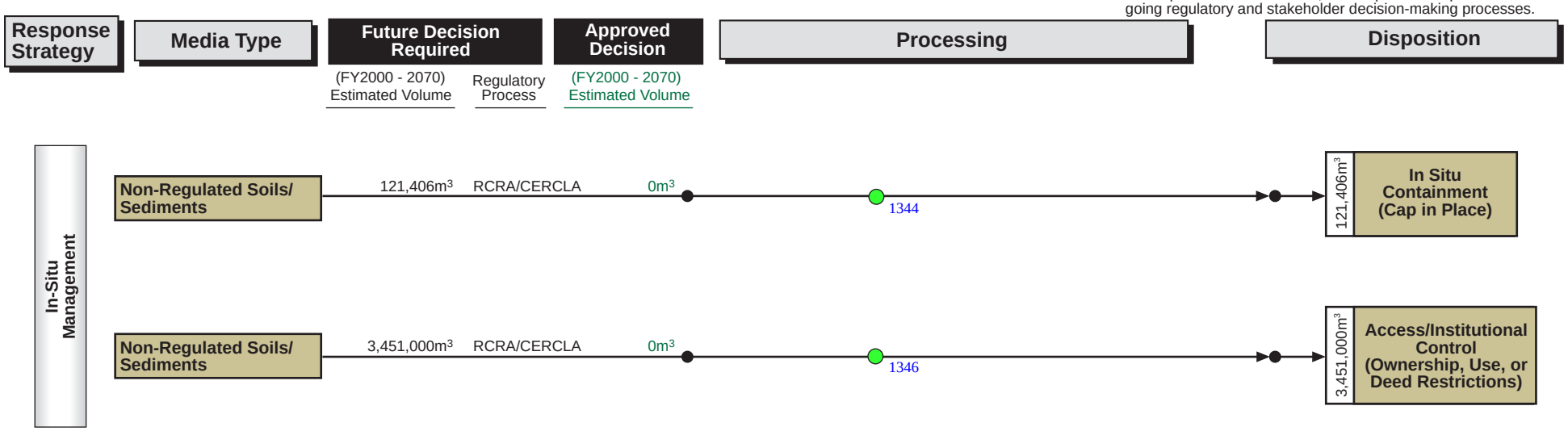

	Future Decision	Approved
Groundwater/Surfacewater:	38,246,204m^3	695,432m^3
In-Situ Response Strategy:	3,572,406m^3	0m^3
Ex Situ Response Strategy:	7,574m^3	4,663m^3

KEY: Albuquerque | Carlsbad | Chicago | Commercial | Idaho | Nevada | Oak Ridge | Oakland | Ohio | Richland | Rocky Flats | SRS | Other | Unknown | Off-site Interface: ▷ | On site Interface: ◇

Rev. 5.0
6/30/00

Pantex HAZ Disposition Map

Dataset: IPAB-IS (6/26/00)

PREDECISIONAL DRAFT

This map is conceptual and in many cases does not represent cleanup or transfer decisions; this map does not preclude the on-going regulatory and stakeholder decision-making processes.

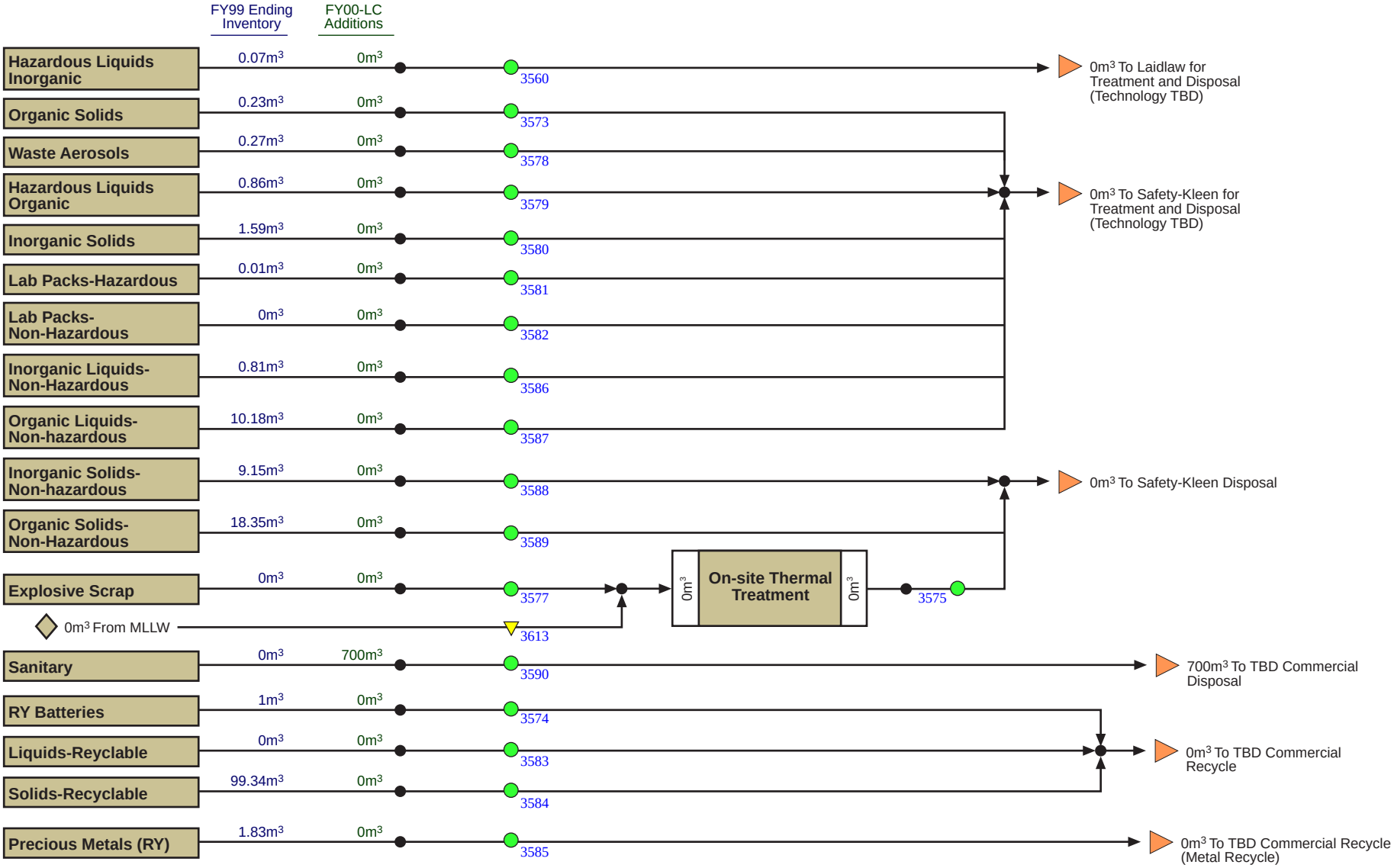

KEY: Albuquerque | Carlsbad | Chicago | Commercial | Idaho | Nevada | Oak Ridge | Oakland | Ohio | Richland | Rocky Flats | SRS | Other | Unknown | Off-site Interface: ▷ | On site Interface: ◇

Rev. 5.0
6/30/00

Pantex LLW Disposition Map

Dataset: IPAB-IS (6/26/00)

PREDECISIONAL DRAFT

This map is conceptual and in many cases does not represent cleanup or transfer decisions; this map does not preclude the on-going regulatory and stakeholder decision-making processes.

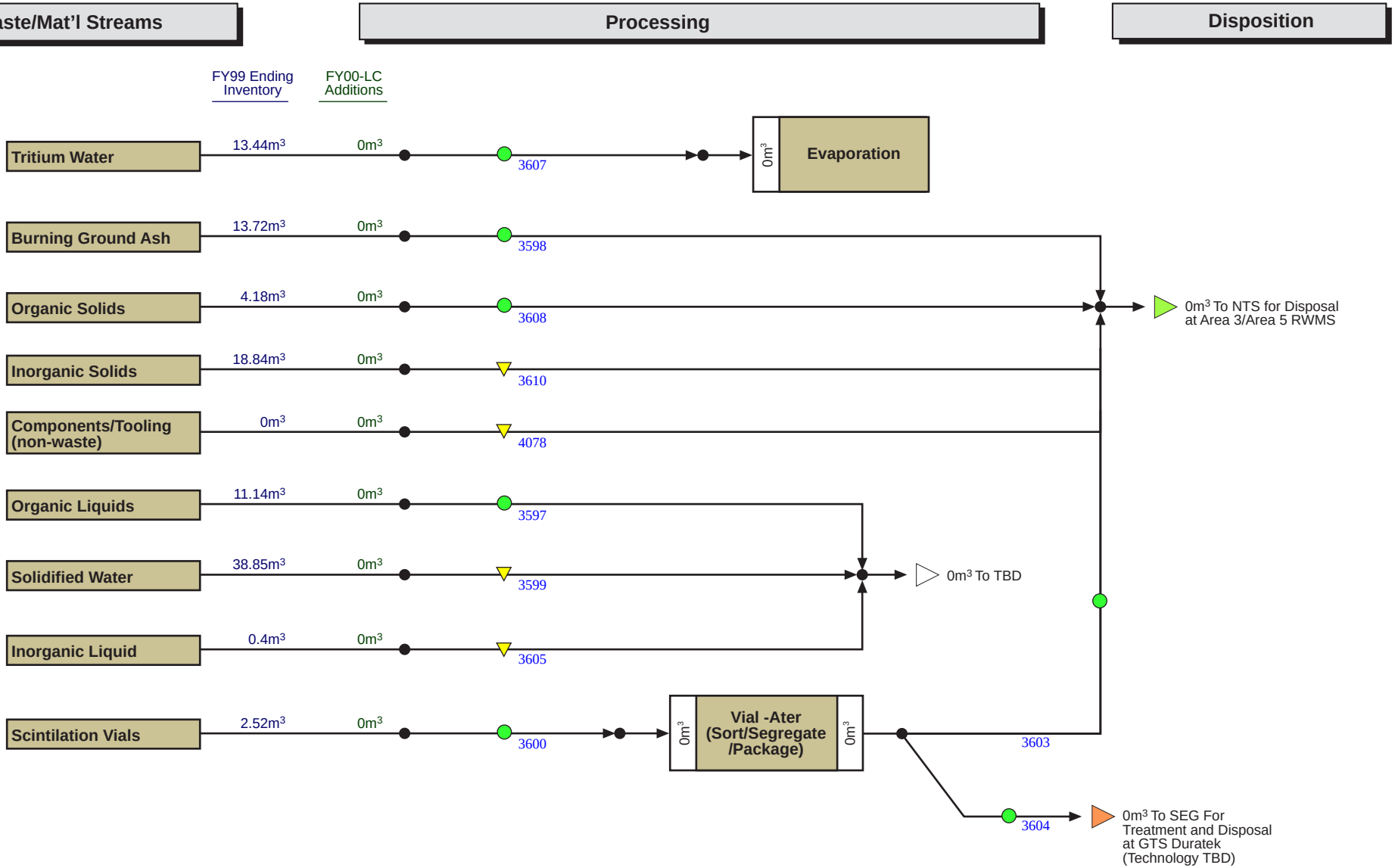

KEY: Albuquerque | Carlsbad | Chicago | Commercial | Idaho | Nevada | Oak Ridge | Oakland | Ohio | Richland | Rocky Flats | SRS | Other | Unknown | Off-site Interface: ▷ | On site Interface: ◇

Rev. 5.0
6/30/00

Pantex MLLW Disposition Map

Dataset: IPAB-IS (6/26/00)

PREDECISIONAL DRAFT

This map is conceptual and in many cases does not represent cleanup or transfer decisions; this map does not preclude the on-going regulatory and stakeholder decision-making processes.

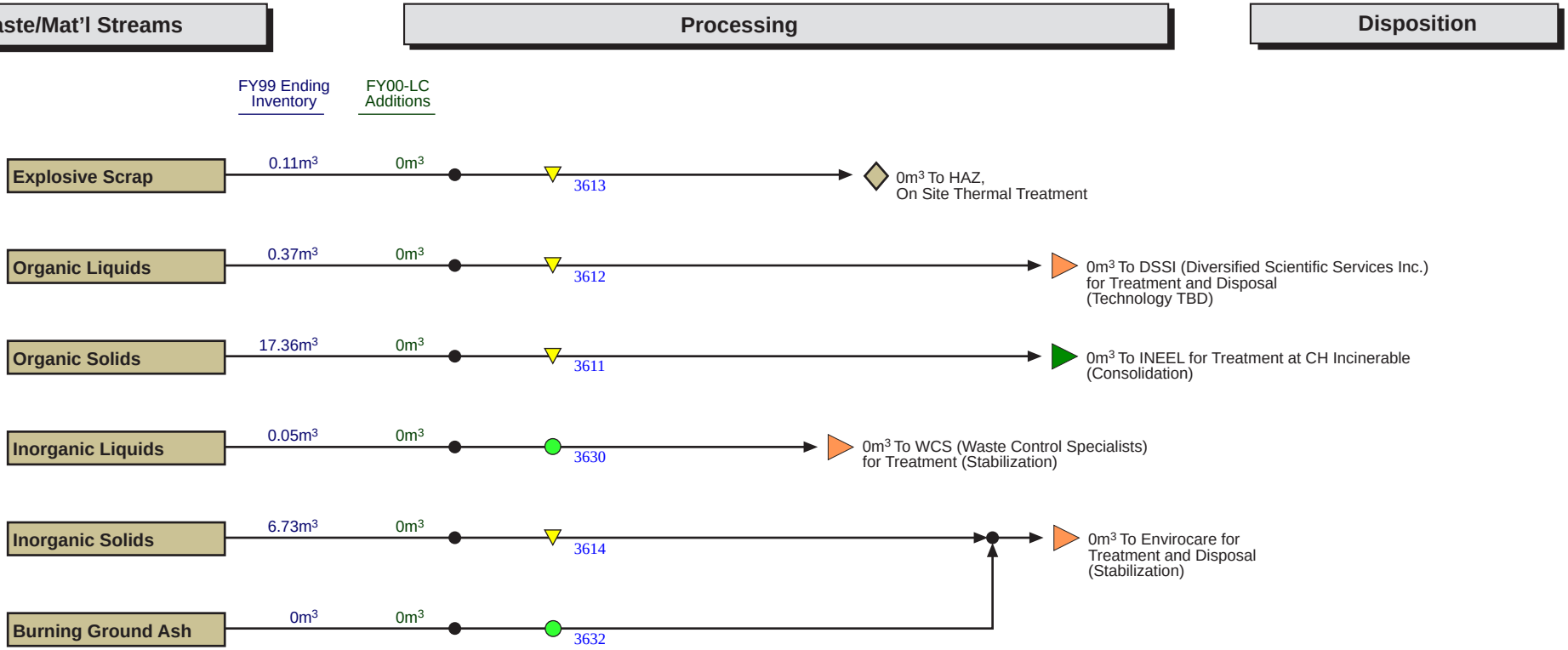

KEY: Albuquerque | Carlsbad | Chicago | Commercial | Idaho | Nevada | Oak Ridge | Oakland | Ohio | Richland | Rocky Flats | SRS | Other | Unknown | Off-site Interface: ▷ | On site Interface: ◇

Rev. 5.0
6/30/00

SNL ER Disposition Map

Dataset: IPAB-IS (6/26/00)

PREDECISIONAL DRAFT

This map is conceptual and in many cases does not represent cleanup or transfer decisions; this map does not preclude the on-going regulatory and stakeholder decision-making processes.

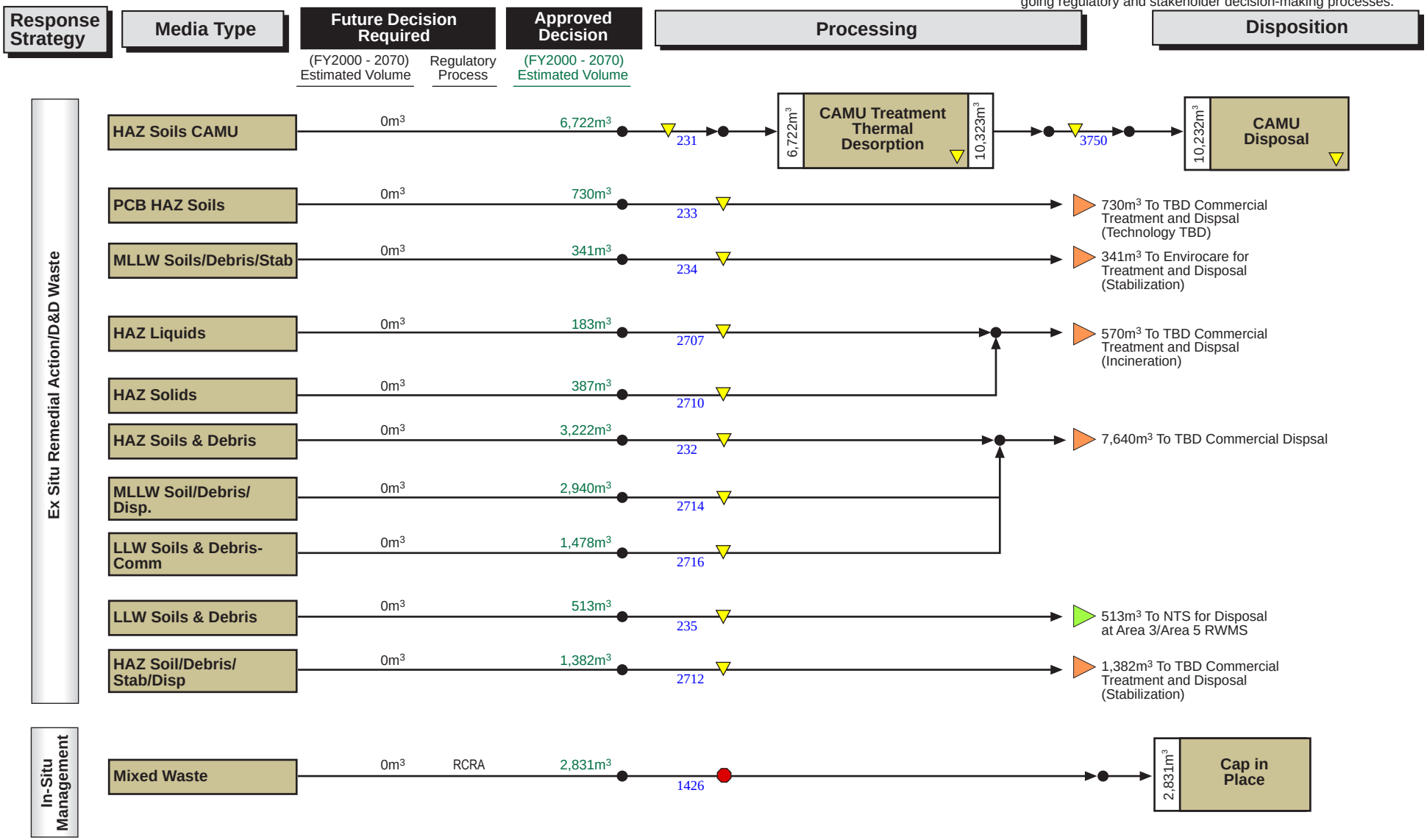

	Future Decision	Approved
Groundwater/Surfacewater:	0m³	0m³
In-Situ Response Strategy:	0m³	2,831m³
Ex Situ Response Strategy:	0m³	17,898m³

KEY: Albuquerque | Carlsbad | Chicago | Commercial | Idaho | Nevada | Oak Ridge | Oakland | Ohio | Richland | Rocky Flats | SRS | Other | Unknown | Off-site Interface: ▷ | On site Interface: ◇

Rev. 5.0
6/30/00

SNL HAZ Disposition Map

Dataset: IPAB-IS (6/26/00)

PREDECISIONAL DRAFT

This map is conceptual and in many cases does not represent cleanup or transfer decisions; this map does not preclude the on-going regulatory and stakeholder decision-making processes.

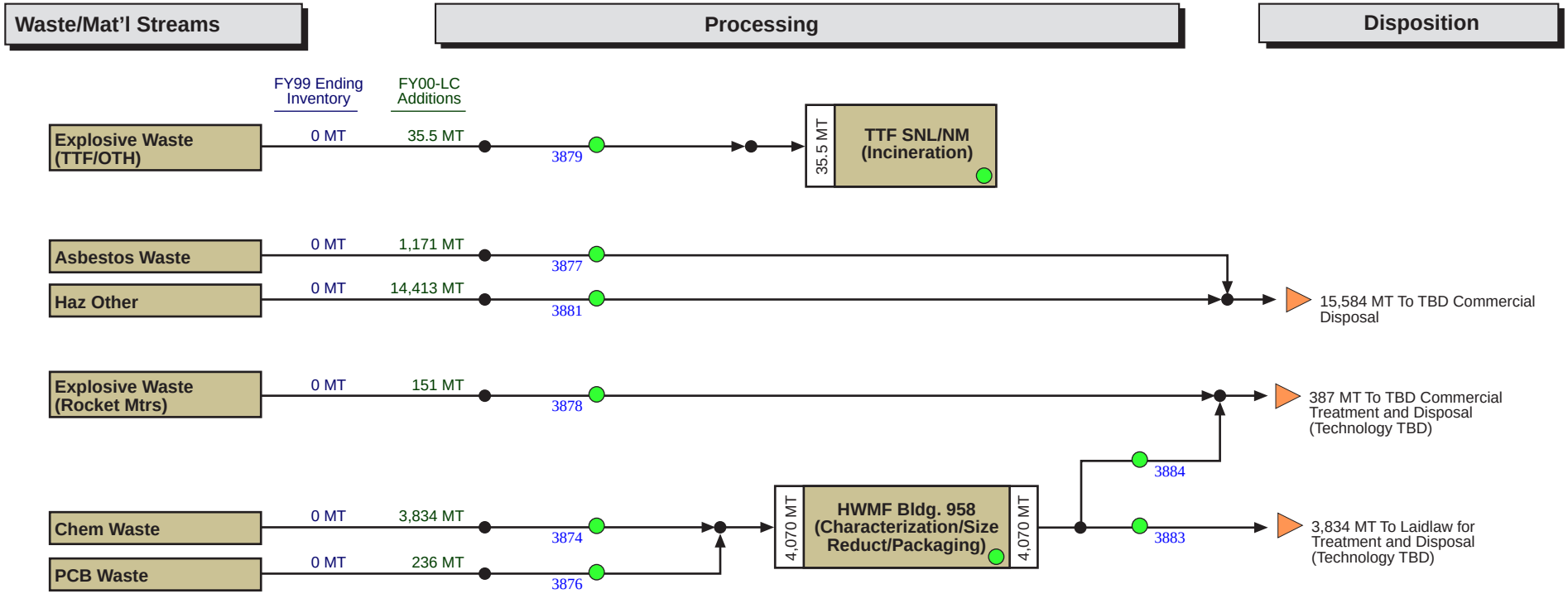

KEY: Albuquerque | Carlsbad | Chicago | Commercial | Idaho | Nevada | Oak Ridge | Oakland | Ohio | Richland | Rocky Flats | SRS | Other | Unknown | Off-site Interface: ▷ | On site Interface: ◇

Rev. 5.0
6/30/00

SNL LLW Disposition Map

Dataset: IPAB-IS (6/26/00)

PREDECISIONAL DRAFT

This map is conceptual and in many cases does not represent cleanup or transfer decisions; this map does not preclude the on-going regulatory and stakeholder decision-making processes.

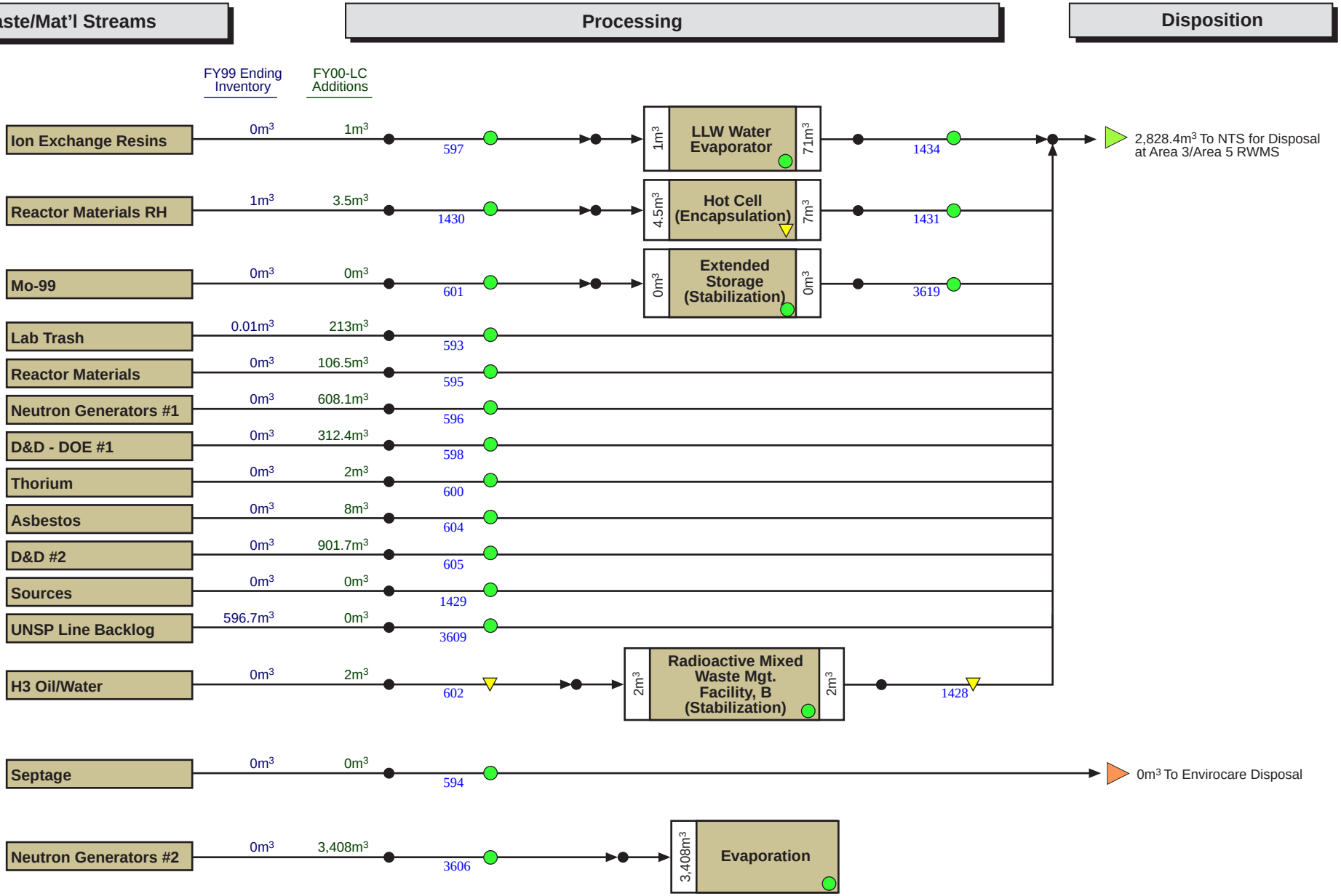

KEY: Albuquerque | Carlsbad | Chicago | Commercial | Idaho | Nevada | Oak Ridge | Oakland | Ohio | Richland | Rocky Flats | SRS | Other | Unknown | Off-site Interface: ▷ | On site Interface: ◇

Rev. 5.0
6/30/00

SNL MLLW Disposition Map

Dataset: IPAB-IS (6/26/00)

PREDECISIONAL DRAFT

This map is conceptual and in many cases does not represent cleanup or transfer decisions; this map does not preclude the on-going regulatory and stakeholder decision-making processes.

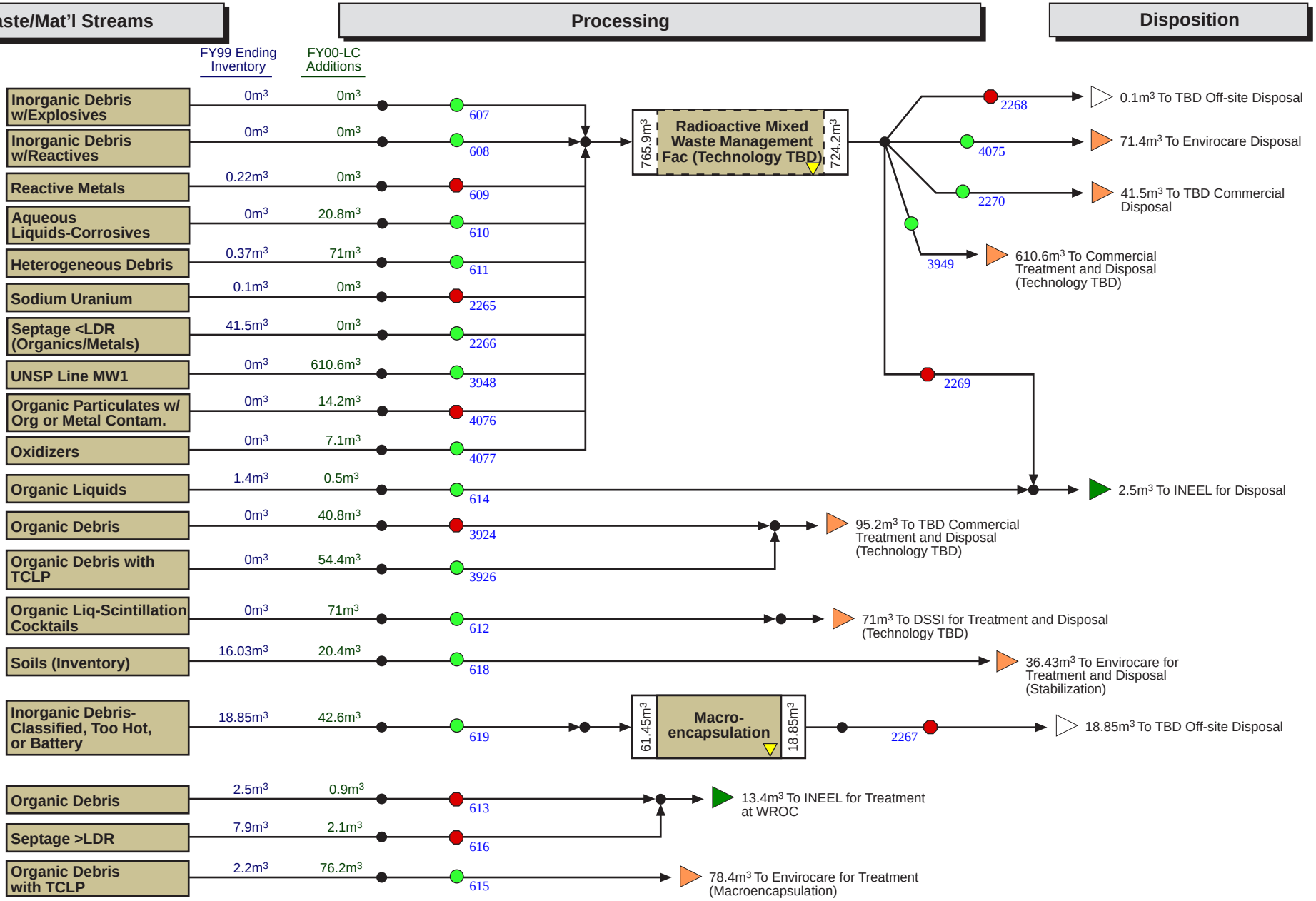

KEY: Albuquerque | Carlsbad | Chicago | Commercial | Idaho | Nevada | Oak Ridge | Oakland | Ohio | Richland | Rocky Flats | SRS | Other | Unknown | Off-site Interface: ▷ | On site Interface: ◇

Rev. 5.0
6/30/00

SNL SNF Disposition Map

Dataset: IPAB-IS (6/26/00)

PREDECISIONAL DRAFT

This map is conceptual and in many cases does not represent cleanup or transfer decisions; this map does not preclude the on-going regulatory and stakeholder decision-making processes.

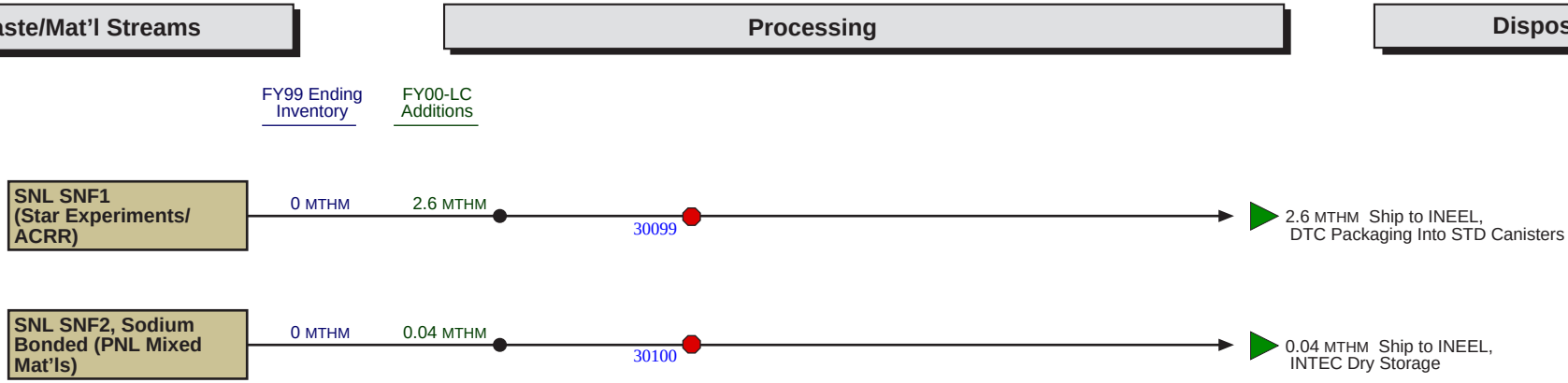

KEY: Albuquerque | Carlsbad | Chicago | Commercial | Idaho | Nevada | Oak Ridge | Oakland | Ohio | Richland | Rocky Flats | SRS | Other | Unknown | Off-site Interface: ▷ | On site Interface: ◇

Rev. 5.0
6/30/00

SNL TRU Disposition Map

Dataset: IPAB-IS (6/26/00)

PREDECISIONAL DRAFT

This map is conceptual and in many cases does not represent cleanup or transfer decisions; this map does not preclude the on-going regulatory and stakeholder decision-making processes.

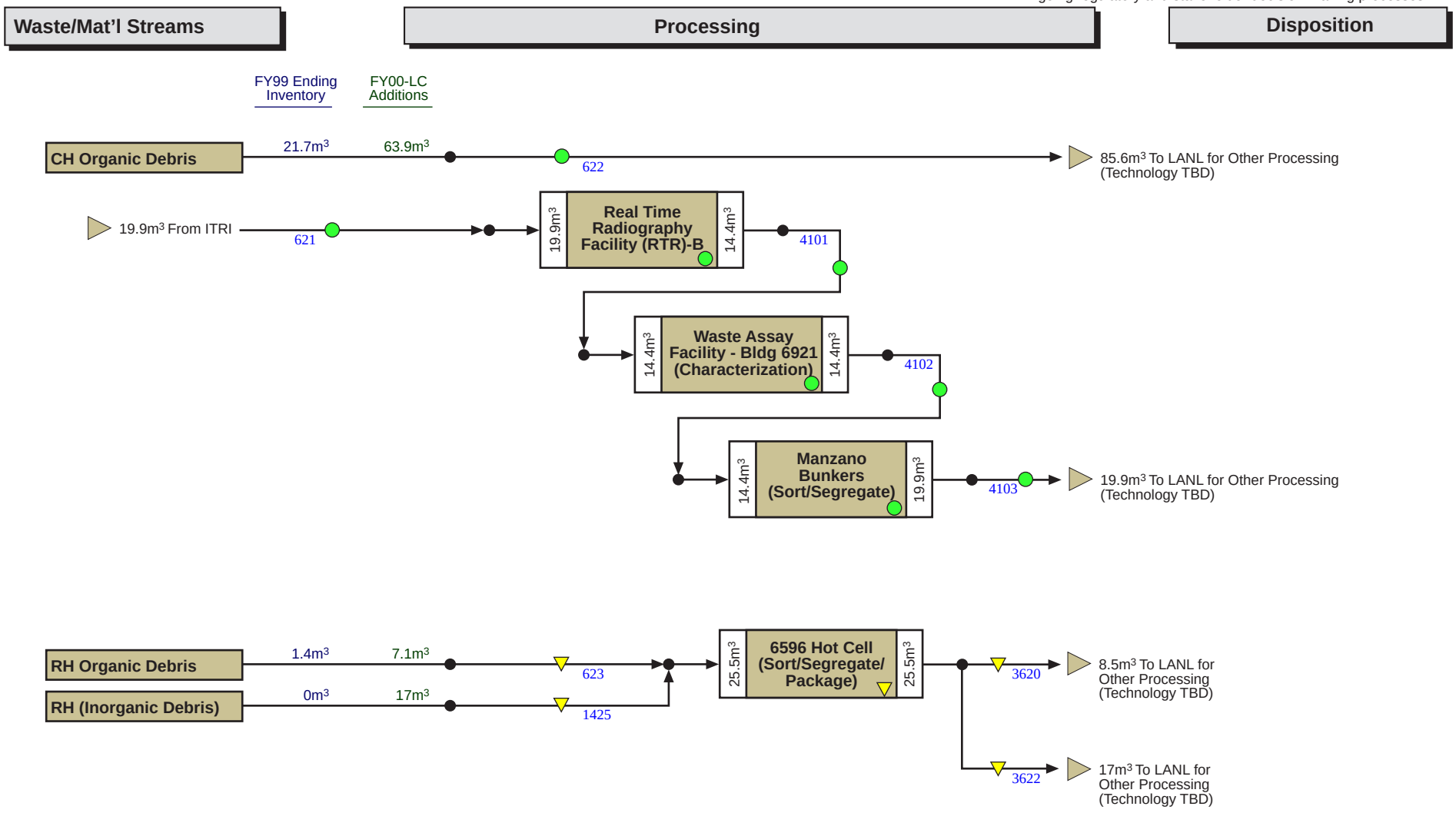

KEY: Albuquerque | Carlsbad | Chicago | Commercial | Idaho | Nevada | Oak Ridge | Oakland | Ohio | Richland | Rocky Flats | SRS | Other | Unknown | Off-site Interface: ▷ | On site Interface: ◇

Rev. 5.0
6/30/00

UMTRA ER Disposition Map

Dataset: IPAB-IS (6/26/00)

PREDECISIONAL DRAFT

This map is conceptual and in many cases does not represent cleanup or transfer decisions; this map does not preclude the on-going regulatory and stakeholder decision-making processes.

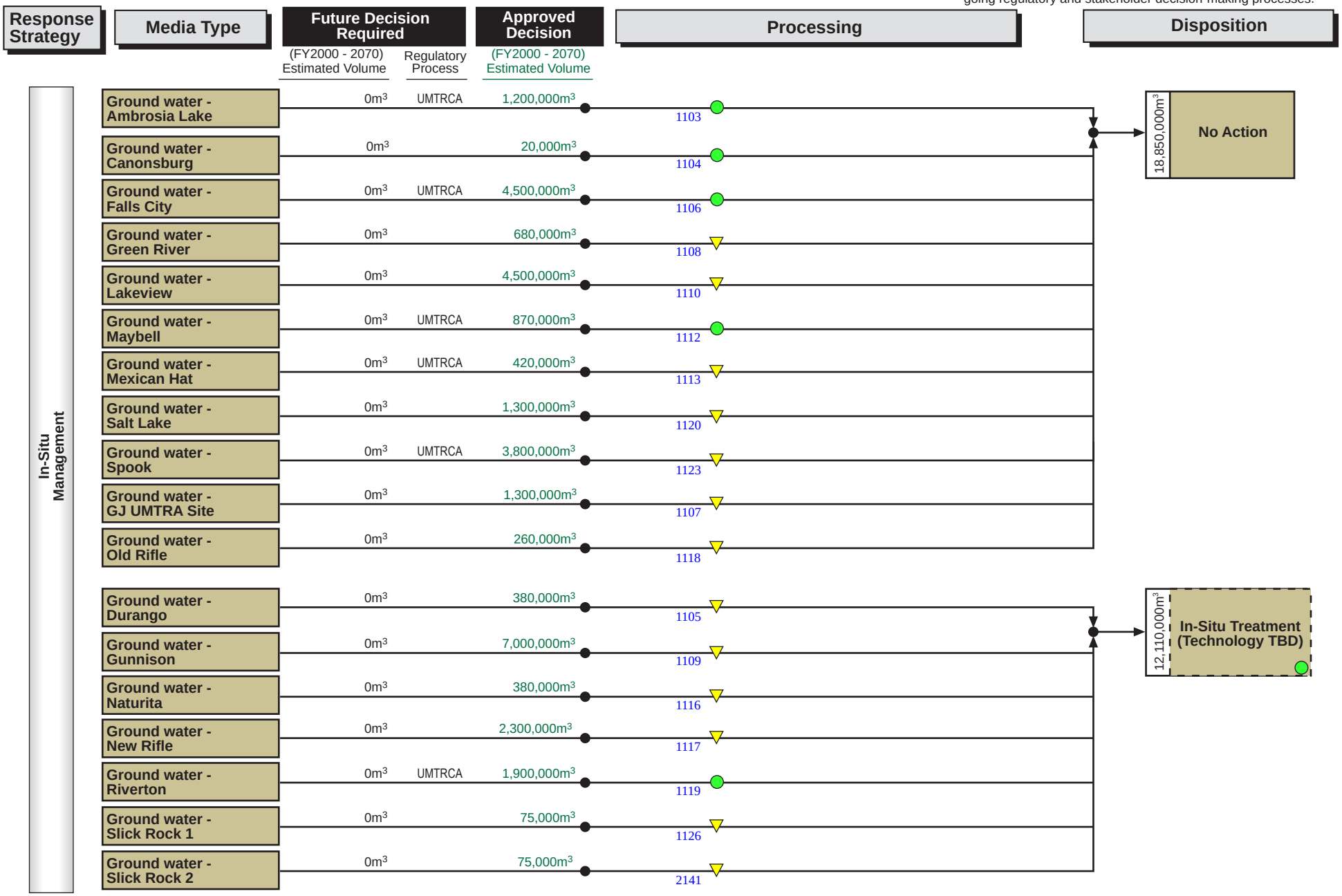

KEY: Albuquerque | Carlsbad | Chicago | Commercial | Idaho | Nevada | Oak Ridge | Oakland | Ohio | Richland | Rocky Flats | SRS | Other | Unknown | Off-site Interface: ▷ | On site Interface: ◇

Rev. 5.0
6/30/00

UMTRA ER Disposition Map

Dataset: IPAB-IS (6/26/00)

PREDECISIONAL DRAFT

This map is conceptual and in many cases does not represent cleanup or transfer decisions; this map does not preclude the on-going regulatory and stakeholder decision-making processes.

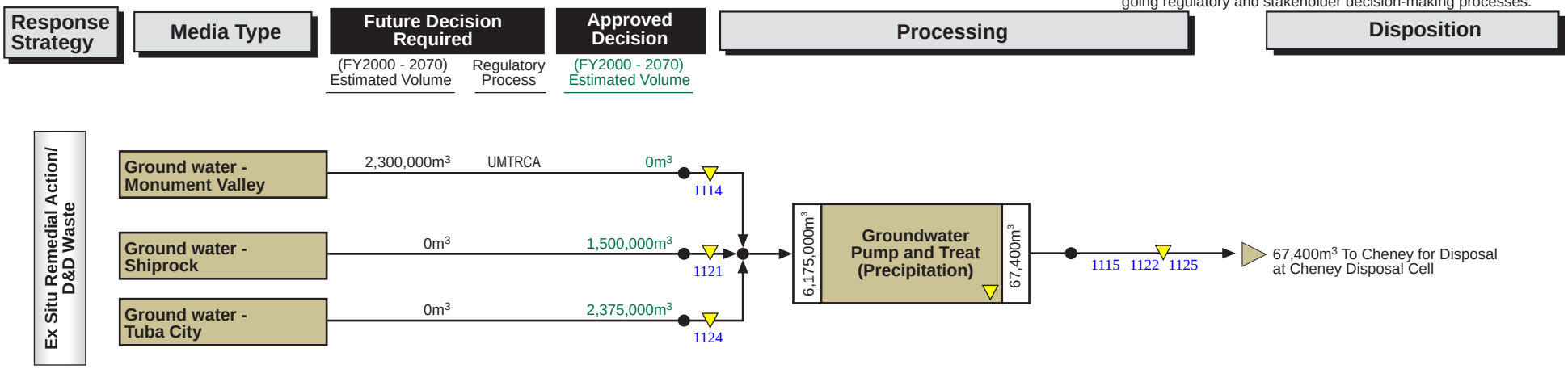

	Future Decision	Approved
Groundwater/Surfacewater:	2,300,000m^3	34,835,000m^3
In-Situ Response Strategy:	0m^3	0m^3
Ex Situ Response Strategy:	0m^3	0m^3

KEY: Albuquerque | Carlsbad | Chicago | Commercial | Idaho | Nevada | Oak Ridge | Oakland | Ohio | Richland | Rocky Flats | SRS | Other | Unknown | Off-site Interface: ▷ | On site Interface: ◇

Rev. 5.0
6/30/00